BELGOTCH

CONTENTS

Belgotch

•Short width model	Type34-N1	P041
•Standard model •Meander-less model •High speed model •Tilted model •Troughed belt model •Roller edge meander-less model •Knife edge model •Joint model •Joint meander-less model	Type34-S1 Type34-G1 Type34-H1 Type34-T1 Type34-V1 Type34-RG1 Type34-K1 Type34-J1 Type34-JG1	P042～050
•Standard model •Meander-less model •Belt cleat model •Troughed belt model •Roller edge meander-less model •Knife edge model	Type34-S2 Type34-G2 Type34-D2 Type34-V2 Type34-RG2 Type34-K2	P051～056
•Standard model •Meander-less model •Standard model •Strong type model	Type60-S1 Type60-G1 Type60-SZ1P Type60-GZ1P	P057～059
•Standard model •Meander-less model	Type60-S2 Type60-G2	P060～061
•Standard model •Meander-less model •Standard model	Type90-S1 Type90-G1 Type90-S2	P062～064
•Slope belt cleat model •Steep slope belt cleat model	Type60-ZD2 Type120-ZD2S	P065～066
•Belt •Legs •Guide •Optional parts		P067～079

TYPE 34-N1 Short width model

34-frame

Aluminum frame | Center drive | Light weight model

■A timing belt is used for the drive part as standard.

*The legs are available as option. See the option page (the standard color is silver).

Standard belt (enlarged view)

The speed change model equipped with a brushless DC motor and a control unit as standard.

The maximum rotation speed of 4,000 r/min and a velocity ratio of 1:37.5 (80 to 3,000 r/min) can be set.
The motor speed is displayed on the monitor.

SELECT How to select a model

Type34	NS1	50	2,000	T1	A25
Number/ frame thickness (mm)	N:short width/ model name Standard/ center drive Meander-less/ center drive S:Standard model G:Meander-less model	Belt width (mm)	Machine length (mm)	Constant speed/T Speed change/B Number/ speed symbol	A (100 VAC, single phase) B (200 VAC, single phase) C (200 VAC, three phase) Number/motor output (25 W/40 W/60 W)

SIZE Standard specifications

(Unit: mm)

Belt width (nominal)	50					75				
Machine width	90 (frame part)					115 (frame part)				
Machine length	500	1,000	1,500	2,000	2,500	3,000	3,500	4,000	5,000	6,000

Machine height 150
Belt speed Constant speed / Speed change
Transport capacity See the transport capacity graph.
Rated output Constant speed 25 W, 40 W / Speed change 60 W
Power 100 VAC (single phase) / 200 VAC (single phase) / 200 VAC (three phase)
Belt (standard) Polyurethane belt (Green color, compliant with food standards, antistatic treatment done)
Option Legs, guide, etc.

●The actual belt width becomes narrower than the above nominal belt width by 5 mm, and by 10 mm when the machine length of 4 m is exceeded.

DRAWING

(Unit: mm)

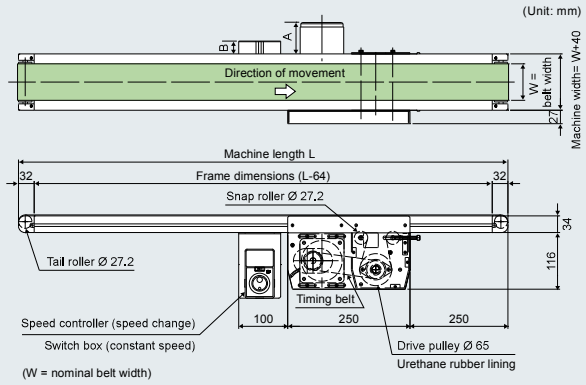

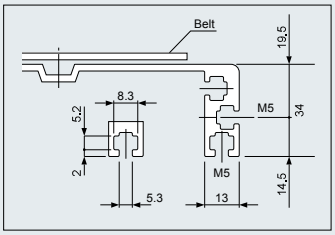

Frame cross section

DATA

Transport capacity graph (constant speed)

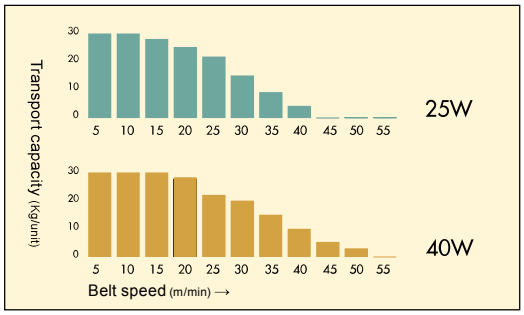

■ The graph shows the capacity when the loads are dispersed horizontally. Carry items at the setting of 40% or below.
■ The transport capacity fluctuates depending on various factors.

Belt speed table

Reduction ratio	Speed symbol	Constant speed (m/min) 50/60(Hz)	Reduction ratio	Speed symbol	Speed change (m/min) 50・60(Hz)
1/180	T1	1.6/1.9	1/200	B1	0.1～2.9
1/150	T2	1.9/2.3			
1/120	T3	2.4/2.9			
1/100	T4	2.9/3.5	1/100	B2	0.16～5.8
1/90	T5	3.2/3.9			
1/75	T6	3.9/4.6			
1/60	T7	4.8/5.8			
1/50	T8	5.8/7.0	1/50	B3	0.3～11.6
1/36	T9	8.1/9.7			
1/30	T10	9.7/11.6			
1/25	T11	11.6/14.0	1/30	B4	0.5～19.3
1/18	T12	16.2/19.4			
1/15	T13	19.4/23.3	1/20	B5	0.8～29.1
1/12.5	T14	23.3/27.9			
1/9	T15	32.3/38.8	1/15	B6	1.0～38.7

■ The constant belt speed is calculated by the motor speed of 1,500/1,800 rpm (50/60 Hz), drive pulley diameter of Ø 65, and drive efficiency of 95%.
■ The belt speed of speed change is calculated by the motor speed of 80 rpm to 3,000 rpm (50・60 Hz), drive pulley diameter of Ø 65, and drive efficiency of 95%.
■ The speed change type is recommended when the speed needs to be selected accurately.
■ The pulley and the motor work together by the timing belt system.

Standard setting motor output table (mm)

Machine length \ Belt width	50	75
500～3,000	Constant speed 25 W, speed change 60 W	
3,001～6,000	Constant speed 40 W, speed change 60 W	

Switch box projection dimension (mm)

Nominal belt width	50	75
Projection dimension	68	43

*Common to constant speed and speed change

Motor projection dimension

●Constant speed (mm)

Motor output \ Belt width	50	75
25W	46.5(36)	21.5(11)
40W	84(66)	59(41)

*( ) For a gear head with reduction ratio of 1/9 to 1/18

●Speed change (mm)

Motor output \ Belt width	50	75
60W	14(9) ((19))	—

*( ) For a reduction ratio of 1/15 or 1/20
*(( )) For a reduction ratio of 1/200

TYPE 34-S1 Standard model

34-frame

Aluminum frame | **Center drive** | **Light weight model**

A timing belt is used for the drive part as standard for the first time in this class. The general-purpose model of the Belgotch series having excellent quietness and durability.

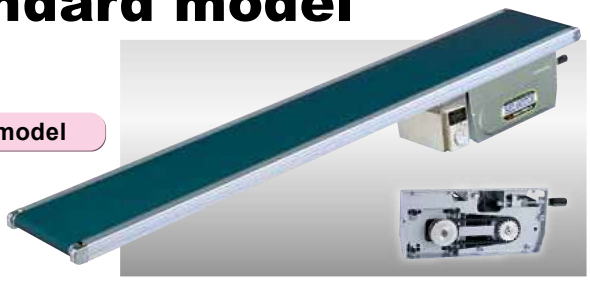

*The legs are available as option. See the option page (the standard color is silver).

*The chain system is adopted depending on the machine length and the belt width.

Standard belt (enlarged view)

The speed change model equipped with a brushless DC motor and a control unit as standard.

The maximum rotation speed of 4,000 r/min and a velocity ratio of 1:37.5 (80 to 3,000 r/min) can be set.
The motor speed is displayed on the monitor.

SELECT How to select a model

Type34	S1	300	2,000	B1	A60
Number/ frame thickness (mm)	S: Standard/ model name 1: Center drive	Belt width (mm)	Machine length (mm)	Constant speed/T Speed change/B Number/ speed symbol	A (100 VAC, single phase) B (200 VAC, single phase) C (200 VAC, three phase) Number/motor output (25 W/40 W/60 W/ 90 W/120 W)

SIZE Standard specifications

(Unit: mm)

Belt width (nominal)	50	75	100	150	200	250	300	350	400	500	600
Machine width	90	115	140	190	240	290	340	390	440	540	640
Machine length	500	1,000	1,500	2,000	2,500	3,000	3,500	4,000	5,000	6,000	7,000	8,000

Machine height 169

Belt speed Constant speed
Speed change

Transport capacity See the transport capacity graph.

Rated output Constant speed
25 W, 40 W, 60 W
Speed change 60 W, 120 W

Power 100 VAC (single phase)
200 VAC (single phase)
200 VAC (three phase)

Belt (standard) Polyurethane belt (Green color, compliant with food standards, antistatic treatment done)

Option Legs, guide, etc.

- The actual belt width becomes narrower than the above nominal belt width by 5 mm, and by 10 mm when the machine length of 4 m is exceeded and in the case of models with a belt width of 500 and 600.
- When the machine length is 6 m or above, an intermediate take-up unit comes with the conveyor.

DRAWING

(Unit: mm)

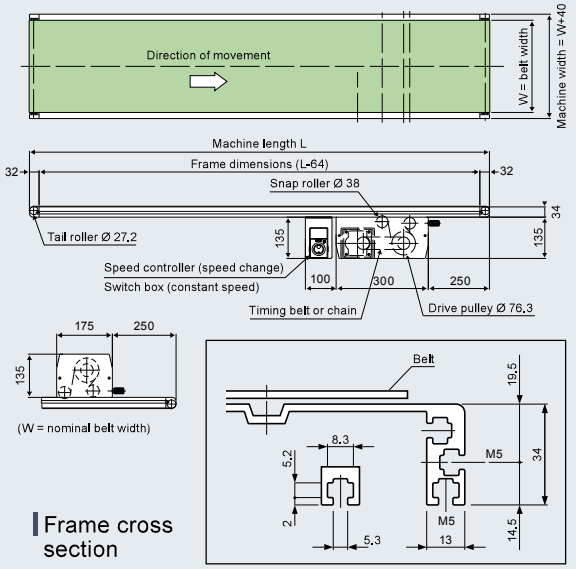

Frame cross section

DATA

Transport capacity graph (constant speed)

machine length 3,000, belt width 300

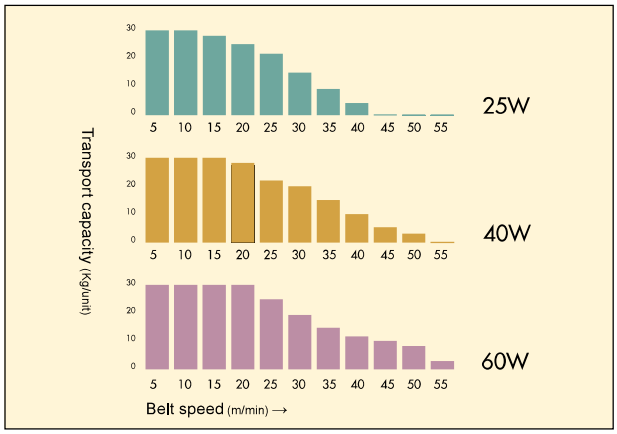

- The graph shows the capacity when the loads are dispersed horizontally. Carry items at the setting of 40% or below.
- The transport capacity fluctuates depending on various factors.

Belt speed table

Reduction ratio	Speed symbol	Constant speed (m/min) 50/60(Hz)	Reduction ratio	Speed symbol	Speed change (m/min) 50・60(Hz)
1/180	T1	1.9/2.3	1/200	B1	0.1～3.4
1/150	T2	2.3/2.7			
1/120	T3	2.8/3.4	1/100	B2	0.2～6.8
1/100	T4	3.4/4.1			
1/90	T5	3.8/4.5			
1/75	T6	4.6/5.5			
1/60	T7	5.7/6.8	1/50	B3	0.4～13.6
1/50	T8	6.8/8.2			
1/36	T9	9.5/11.4			
1/30	T10	11.4/13.7	1/30	B4	0.6～22.7
1/25	T11	13.7/16.4			
1/18	T12	19.0/22.8			
1/15	T13	22.8/27.3	1/20	B5	1.0～34.1
1/12.5	T14	27.3/32.8			
1/9	T15	37.9/45.5	1/15	B6	1.2～45.5

- The constant belt speed is calculated by the motor speed of 1,500/1,800 rpm (50/60 Hz), drive pulley diameter of Ø 76.3, and drive efficiency of 95%.
- The belt speed of speed change is calculated by the motor speed of 80 rpm to 3,000 rpm (50・60 Hz), drive pulley diameter of Ø 76.3, and drive efficiency of 95%.
- The speed change type is recommended when the speed needs to be selected accurately.
- Speed change 120 W and speed symbols B1 to B4 are chain drive ▭. Others are timing belt drive.

Standard setting motor output table (mm)

Machine length \ Belt width	50~200	250~400	500~600
500~3,000	Constant speed 25 W, speed change 60 W		
3,001~4,000	Constant speed 40 W, speed change 60 W		
4,001~6,000			
6,001~8,000	Constant speed 60 W, speed change 120 W		

*50 W up to a machine length of 2,500 L *75 W up to a machine length of 6,000 L

Switch box projection dimension (mm)

Nominal belt width	50	75	100
Projection dimension	68	43	18

*Common to constant speed and speed change

Motor projection dimension

●Constant speed (mm)

Motor output \ Belt width	50	75	100	150
25W	72(61)	47(36)	22(11)	—
40W	109(91)	84(66)	59(41)	9
60W	—	—	85	35
90W	—	—	100	50

*( ) For a reduction ratio of 1/9 to 1/18

●Speed change (mm)

Motor output \ Belt width	50	75	100	150
60W	42(37)((47))	17(12)((22))	—	—
120W	—	—	14(2)((20))	—

*( ) For a reduction ratio of 1/15 or 1/20
*(( )) For a reduction ratio of 1/200

TYPE 34-G1 Meander-less model

34-frame

Aluminum frame | **Center drive** | **Light weight model**

Stable conveyance with less deviation is realized by adopting a meander-less belt. It is suitable for places that are difficult to perform maintenance inspection such as when the conveyor is set to other machines. It also supports severe use conditions such as forward reverse operations and can be used for various purposes.

*The legs are available as option. See the option page (the standard color is silver).

*The chain system is adopted depending on the machine length and the belt width.

Standard belt (enlarged view)

The speed change model equipped with a brushless DC motor and a control unit as standard.

The maximum rotation speed of 4,000 r/min and a velocity ratio of 1:37.5 (80 to 3,000 r/min) can be set.
The motor speed is displayed on the monitor.

SELECT How to select a model

Type34 - G1 - 200 - 1,500 - B3 - B60

Type34	G1	200	1,500	B3	B60
Number/ frame thickness (mm)	G: Meander-less/ model name 1: Center drive	Belt width (mm)	Machine length (mm)	Constant speed/T Speed change/B Number/ speed symbol	A (100 VAC, single phase) B (200 VAC, single phase) C (200 VAC, three phase) Number/motor output (40 W/60 W/120 W)

SIZE Standard specifications

(Unit: mm)

Belt width (nominal)	50	75	100	150	200	250	300	350	400	500	600
Machine width	90	115	140	190	240	290	340	390	440	540	640
Machine length	500	1,000	1,500	2,000	2,500	3,000	3,500	4,000	5,000	6,000	

Machine height 169
Belt speed Constant speed / Speed change
Transport capacity See the transport capacity graph.
Rated output Constant speed 40 W, 60 W / Speed change 60 W, 120 W
Power 100 VAC (single phase) / 200 VAC (single phase) / 200 VAC (three phase)
Belt (standard) Polyurethane belt (Green color, compliant with food standards, antistatic treatment done)
Option Legs, guide, etc.

●The actual belt width becomes narrower than the above nominal belt width by 5 mm, and by 10 mm when the machine length of 4 m is exceeded and in the case of models with a belt width of 500 and 600.

DRAWING

(Unit: mm)

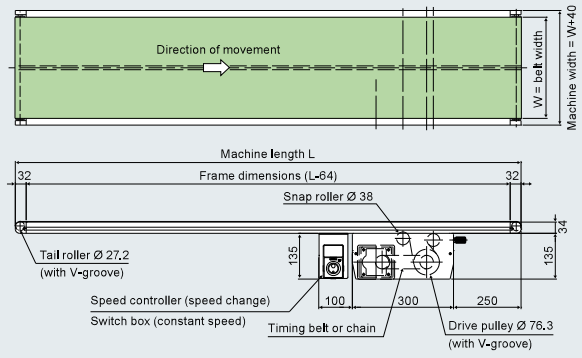

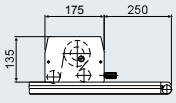

(W = nominal belt width)

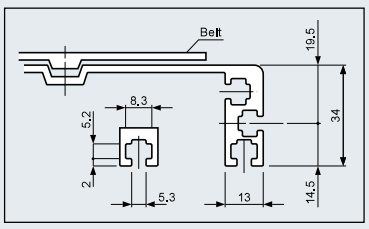

Frame cross section

DATA

Transport capacity graph (constant speed)

machine length 3,000, belt width 300

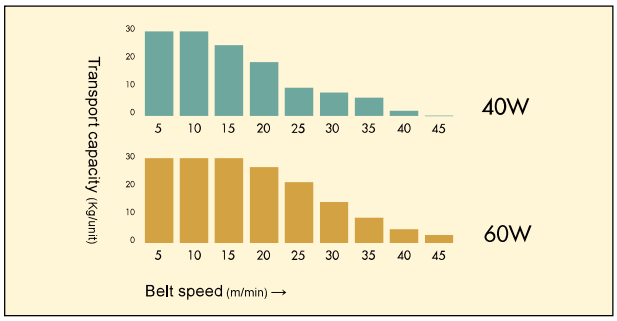

■ The graph shows the capacity when the loads are dispersed horizontally. Carry items at the setting of 40% or below.
■ The transport capacity fluctuates depending on various factors.

Belt speed table

Reduction ratio	Speed symbol	Constant speed (m/min) 50/60(Hz)	Reduction ratio	Speed symbol	Speed change (m/min) 50・60(Hz)
1/180	T1	1.9/2.3	1/200	B1	0.1～3.4
1/150	T2	2.3/2.7			
1/120	T3	2.8/3.4	1/100	B2	0.2～6.8
1/100	T4	3.4/4.1			
1/90	T5	3.8/4.5			
1/75	T6	4.6/5.5			
1/60	T7	5.7/6.8	1/50	B3	0.4～13.6
1/50	T8	6.8/8.2			
1/36	T9	9.5/11.4			
1/30	T10	11.4/13.7	1/30	B4	0.6～22.7
1/25	T11	13.7/16.4			
1/18	T12	19.0/22.8			
1/15	T13	22.8/27.3	1/20	B5	1.0～34.1
1/12.5	T14	27.3/32.8			
1/9	T15	37.9/45.5	1/15	B6	1.2～45.5

■ The constant belt speed is calculated by the motor speed of 1,500/1,800 rpm (50/60 Hz), drive pulley diameter of Ø 76.3, and drive efficiency of 95%.
■ The belt speed of speed change is calculated by the motor speed of 80 rpm to 3,000 rpm (50・60 Hz), drive pulley diameter of Ø 76.3, and drive efficiency of 95%.
■ The speed change type is recommended when the speed needs to be selected accurately.
■ Speed change 120 W and speed symbols B1 to B4 are chain drive ▭. Others are timing belt drive.

Standard setting motor output table (mm)

Machine length \ Belt width	50~250	300~400	500~600
500~3,000	Constant speed 40 W, Speed change 60 W		
3,001~6,000		Constant speed 60 W Speed change 120 W	

*50 W up to a machine length of 1,500 L *75 W up to a machine length of 4,000 L

Switch box projection dimension (mm)

Nominal belt width	50	75	100
Projection dimension	68	43	18

*Common to constant speed and speed change

Motor projection dimension

●Constant speed (mm)

Motor output \ Belt width	50	75	100	150
25W	72(61)	47(36)	22(11)	—
40W	109(91)	84(66)	59(41)	9
60W	—	—	85	35
90W	—	—	100	50

*( ) For a reduction ratio of 1/9 to 1/18

●Speed change (mm)

Motor output \ Belt width	50	75	100	150
60W	42(37)((47))	17(12)((22))	—	—
120W	—	—	14(2)((20))	—

*( ) For a reduction ratio of 1/15 or 1/20
*(( )) For a reduction ratio of 1/200

TYPE 34-H1 High speed model

34-frame

Aluminum frame | **Center drive** | **Light weight model**

The high grade model that meets the needs of factories with advanced labor saving and faster speed.Its compact design with frame thickness of 34 mm does not require a large place for installation.
The drive part that moves fast has low-noise and high-durability specifications, and carries things efficiently without impairing the work environment.

*The chain system is adopted depending on the machine length and the belt width.

*The legs are available as option. See the option page (the standard color is silver).
*It is recommended to attach auxiliary legs because the conveyor may overturn depending on the place where it is installed.

Standard belt (enlarged view)

The speed change model equipped with a brushless DC motor and a control unit as standard.

The maximum rotation speed of 4,000 r/min and a velocity ratio of 1:37.5 (80 to 3,000 r/min) can be set.
The motor speed is displayed on the monitor.

SELECT How to select a model

Type34	H1	400	3,000	T16	A90
Number/ frame thickness (mm)	H: High speed/ model name 1: Center drive	Belt width (mm)	Machine length (mm)	Constant speed/T Speed change/B Number/ speed symbol	A (100 VAC, single phase) B (200 VAC, single phase) C (200 VAC, three phase) Number/motor output (60 W/90 W/120 W)

SIZE Standard specifications

(Unit: mm)

Belt width (nominal)	100	150	200	250	300	350	400	500
Machine width	140	190	240	290	340	390	440	540
Machine length	1,000	1,500	2,000	2,500	3,000			

Machine height 169
Belt speed Constant speed / Speed change
Transport capacity See the transport capacity graph.
Rated output Constant speed 60 W, 90 W / Speed change 120 W
Power 100 VAC (single phase) / 200 VAC (single phase) / 200 VAC (three phase)
Belt (standard) Polyurethane belt (Green color, compliant with food standards, antistatic treatment done)
Option Legs, guide, etc.

●The actual belt width becomes narrower than the above nominal belt width by 10 mm.

DRAWING

(Unit: mm)

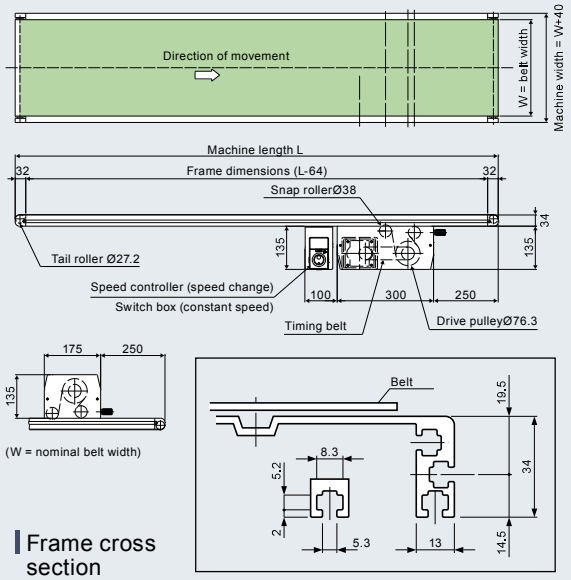

Frame cross section

DATA

Transport capacity graph (constant speed)

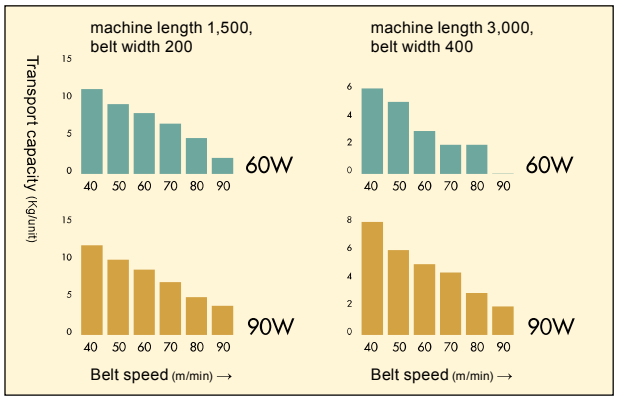

■ The graph shows the capacity when the loads are dispersed horizontally. Carry items at the setting of 40% or below.
■ The transport capacity fluctuates depending on various factors.

Belt speed table

Reduction ratio	Speed symbol	Constant speed (m/min) 50/60(Hz)	Reduction ratio	Speed symbol	Speed change (m/min) 50・60(Hz)
1/7.5	T16	45.5/54.6	1/10	B7	1.8～68.2
1/6	T17	56.9/68.3			
1/5	T18	68.3/82	1/5	B8	3.7～136.5
1/3.6	T19	94.8/113.8			

The constant belt speed is calculated by the motor speed of 1,500/1,800 rpm (50/60 Hz), drive pulley diameter of Ø 76.3, and drive efficiency of 95%.
■ The belt speed of speed change is calculated by the motor speed of 80 rpm to 3,000 rpm (50・60 Hz), drive pulley diameter of Ø 76.3, and drive efficiency of 95%.
■ The speed change type is recommended when the speed needs to be selected accurately.
■ The pulley and the motor work together by the timing belt system.

Switch box projection dimension (mm)

Nominal belt width	100
Projection dimension	18

*Common to constant speed and speed change

Standard setting motor output table (mm)

Machine length \ Belt width	100～250	300～400	500
1,000～1,500	Constant speed 60 W Speed change 120 W		
1,501～3,000		Constant speed 90 W Speed change 120 W	

Motor projection dimension

●Constant speed (mm)

Motor output \ Belt width	100	150
60W	85	35
90W	100	50

●Speed change (mm)

Motor output \ Belt width	100	150
120W	2	—

TYPE 34-T1 Tilted model

34-frame

Aluminum frame | **Center drive** | **Light weight model**

The model smoothly carries things from the tilted surface to the horizontal surface without making a connection.
A vertical groove belt for slopes is used as standard, and the drive part is also movable. Therefore, the conveyor can be installed to slopes or horizontal places depending on the application.
The angle can also be adjusted easily based on the layout.

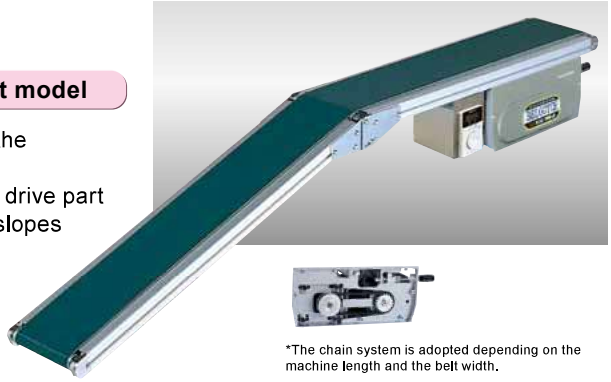

*The chain system is adopted depending on the machine length and the belt width.

*The legs are available as option.
See the option page(the standard color is silver).

Standard belt (enlarged view)

The speed change model equipped with a brushless DC motor and a control unit as standard.

The maximum rotation speed of 4,000 r/min and a velocity ratio of 1:37.5 (80 to 3,000 r/min) can be set.
The motor speed is displayed on the monitor.

SELECT How to select a model

Type34 - T1 - 250 - 2,000 - T8 - C60

Type34	T1	250	2,000	T8	C60
Number/ frame thickness (mm)	T: Tilted/ model name 1: Center drive	Belt width (mm)	Machine length (mm)	Constant speed/T Speed change/B Number/ speed symbol	A (100 VAC, single phase) B (200 VAC, single phase) C (200 VAC, three phase) Number/motor output (60 W/90 W/120 W)

SIZE Standard specifications

(Unit: mm)

Belt width (nominal)	100	150	200	250	300	350	400	500
Machine width	140	190	240	290	340	390	440	540
Machine length	1,500		2,000		2,500	3,000		4,000

Machine height	169
Belt speed	Constant speed Speed change
Transport capacity	See the transport capacity graph.
Rated output	Constant speed 60 W, 90 W Speed change 120 W
Power	100 VAC (single phase) 200 VAC (single phase) 200 VAC (three phase)
Belt (standard)	Polyurethane belt for slopes (Green color, compliant with food standards, antistatic treatment done)
Option	Legs, guide, etc.

- The actual belt width becomes narrower than the above nominal belt width by 5 mm, and by 10 mm in the case of models with a belt width of 400 and 500.
- The slope angle can be adjusted up to 30° steplessly.

DRAWING

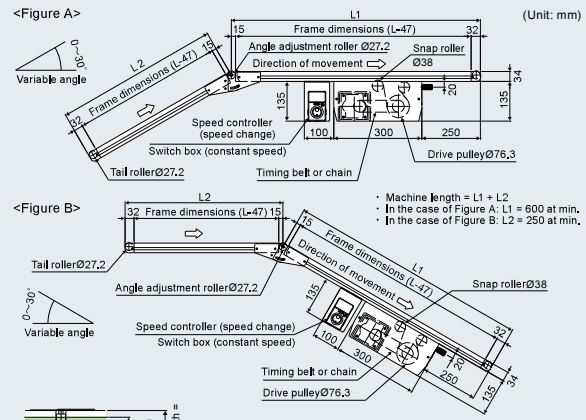

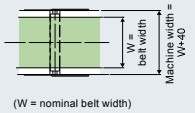

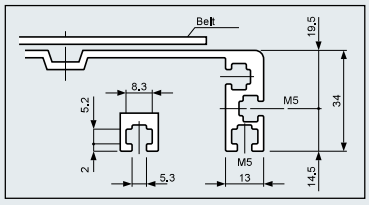

Frame cross section

DATA

Transport capacity graph (constant speed)

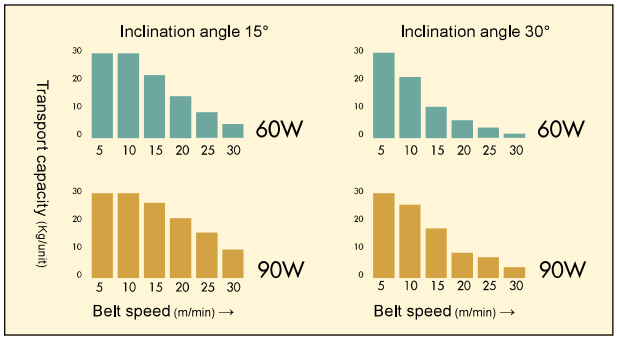

- Weight of items to be carried: 10 kg/m2 at max.
- The graph shows the capacity when the loads are dispersed horizontally. Carry items at the setting of 40% or below.
- The transport capacity fluctuates depending on various factors.

Belt speed table

Reduction ratio	Speed symbol	Constant speed (m/min) 50/60(Hz)	Reduction ratio	Speed symbol	Speed change (m/min) 50・60(Hz)
1/180	T1	1.9/2.3	1/200	B1	0.1～3.4
1/150	T2	2.3/2.7			
1/120	T3	2.8/3.4	1/100	B2	0.2～6.8
1/100	T4	3.4/4.1			
1/90	T5	3.8/4.5			
1/75	T6	4.6/5.5			
1/60	T7	5.7/6.8	1/50	B3	0.4～13.6
1/50	T8	6.8/8.2			
1/36	T9	9.5/11.4			
1/30	T10	11.4/13.7	1/30	B4	0.6～22.7
1/25	T11	13.7/16.4			
1/18	T12	19.0/22.8			
1/15	T13	22.8/27.3	1/20	B5	1.0～34.1
1/12.5	T14	27.3/32.8			

- The constant belt speed is calculated by the motor speed of 1,500/1,800 rpm (50/60 Hz), drive pulley diameter of Ø 76.3, and drive efficiency of 95%.
- The belt speed of speed change is calculated by the motor speed of 80 rpm to 3,000 rpm (50・60 Hz), drive pulley diameter of Ø 76.3, and drive efficiency of 95%.
- The speed change type is recommended when the speed needs to be selected accurately.
- Speed change 120 W and speed symbols B1 to B4 are chain drive [ ]. Others are timing belt drive.

Standard setting motor output table (mm)

Machine length \ Belt width	100~250	300~400	500
1,500~2,000	Constant speed 60 W Speed change 120 W		
2,001~4,000		Constant speed 90 W Speed change 120 W	

Switch box projection dimension (mm)

Nominal belt width	100
Projection dimension	18

*Common to constant speed and speed change

Motor projection dimension

●Constant speed (mm)

Motor output \ Belt width	100	150
60W	85	35
90W	100	50

●Speed change (mm)

Motor output \ Belt width	100	150
120W	14(2)((20))	–

*( ) For a reduction ratio of 1/20
*(( )) For a reduction ratio of 1/200

TYPE 34-V1 Troughed belt model

34-frame

Aluminum frame | **Center drive** | **Light weight model**

The belt surface is troughed at the center, and this allows carrying small things and particulate works that are likely to be spilled without fail.The right and left belt support plates can easily be removed for cleaning etc.

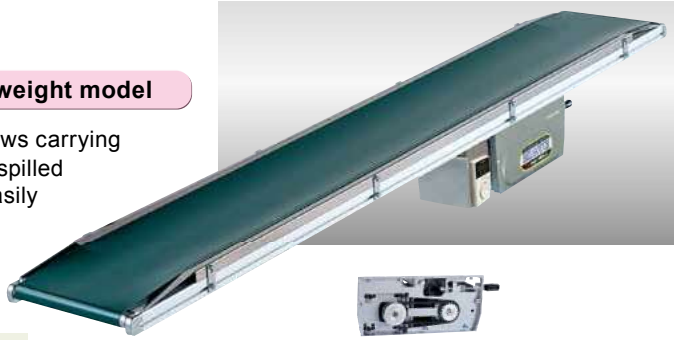

*The chain system is adopted depending on the machine length and the belt width.

*The legs are available as option.
See the option page(the standard color is silver).

Standard belt (enlarged view)

The speed change model equipped with a brushless DC motor and a control unit as standard.

The maximum rotation speed of 4,000 r/min and a velocity ratio of 1:37.5 (80 to 3,000 r/min) can be set.
The motor speed is displayed on the monitor.

SELECT How to select a model

Type34	V1	300	2,000	T8	C60
Number/ frame thickness (mm)	V: Troughed belt/ model name 1: Center drive	Belt width (mm)	Machine length (mm)	Constant speed/T Speed change/B Number/ speed symbol	A (100 VAC, single phase) B (200 VAC, single phase) C (200 VAC, three phase) Number/motor output (60 W/120 W)

SIZE Standard specifications

(Unit: mm)

Belt width (nominal)	200	250	300	350	400	500
Machine width	240	290	340	390	440	540
Machine length	1,000 / 1,500 / 2,000 / 2,500 / 3,000 / 4,000 / 5,000 / 6,000					

Machine height 169
Belt speed Constant speed / Speed change
Transport capacity See the transport capacity graph.
Rated output Constant speed 60 W / Speed change 120 W
Power 100 VAC (single phase) / 200 VAC (single phase) / 200 VAC (three phase)
Belt (standard) Polyurethane belt (Green color, compliant with food standards, antistatic treatment done)
Option Legs, guide, etc.

●The actual belt width becomes narrower than the above nominal belt width by 10 mm.

DRAWING

(Unit: mm)

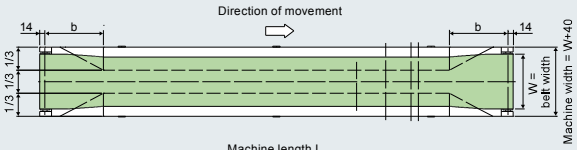

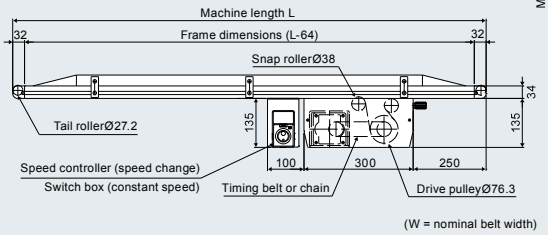

(W = nominal belt width)

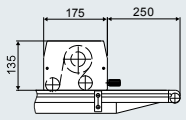

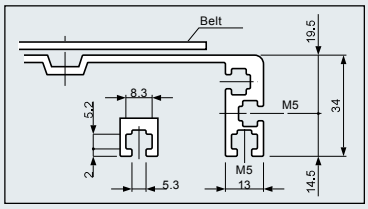

Frame cross section

DATA

Transport capacity graph (constant speed)

machine length 3,000, belt width 300

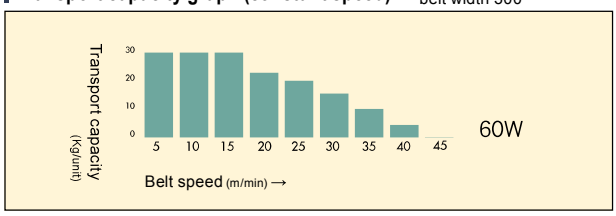

■ The graph shows the capacity when the loads are dispersed horizontally.
Carry items at the setting of 40% or below.
■ The transport capacity fluctuates depending on various factors.

Troughed part dimensions

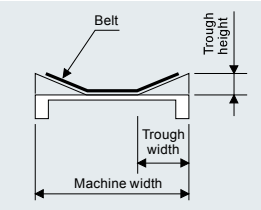

(mm)

Belt width	Dimension b	Trough height	Trough width
200	170	22	80
250	175	25	100
300	210	30	115
350	245	35	130
400	280	40	150
500	350	45	180

Belt speed table

Reduction ratio	Speed symbol	Constant speed (m/min) 50/60(Hz)	Reduction ratio	Speed symbol	Speed change (m/min) 50・60(Hz)
1/180	T1	1.9/2.3	1/200	B1	0.1～3.4
1/150	T2	2.3/2.7			
1/120	T3	2.8/3.4	1/100	B2	0.2～6.8
1/100	T4	3.4/4.1			
1/90	T5	3.8/4.5			
1/75	T6	4.6/5.5			
1/60	T7	5.7/6.8	1/50	B3	0.4～13.6
1/50	T8	6.8/8.2			
1/36	T9	9.5/11.4			
1/30	T10	11.4/13.7	1/30	B4	0.6～22.7
1/25	T11	13.7/16.4			
1/18	T12	19.0/22.8			
1/15	T13	22.8/27.3	1/20	B5	1.0～34.1
1/12.5	T14	27.3/32.8			
1/9	T15	37.9/45.5	1/15	B6	1.2～45.5

■ The constant belt speed is calculated by the motor speed of 1,500/1,800 rpm (50/60 Hz), drive pulley diameter of Ø 76.3, and drive efficiency of 95%.
■ The belt speed of speed change is calculated by the motor speed of 80 rpm to 3,000 rpm (50・60 Hz), drive pulley diameter of Ø 76.3, and drive efficiency of 95%.
■ The speed change type is recommended when the speed needs to be selected accurately.
■ Speed change 120 W and speed symbols B1 to B4 are chain drive ▭. Others are timing belt drive.

Standard setting motor output table

(mm)

Machine length \ Belt width	200～500
1,000～6,000	Constant speed 60 W Speed change 120 W

TYPE 34-RG1 Roller edge meander-less model

34-frame

Aluminum frame | **Center drive** | **Light weight model**

Dimension R at both ends of the conveyor is 8 mm, and the model allows smooth transfer.
A meander-less belt is adopted for the roller edge.
Stable conveyance with less deviation is realized.
Use the conveyor for items with a length of 40 mm or more.
Entrance, exit, and one-side conveyors can also be made.

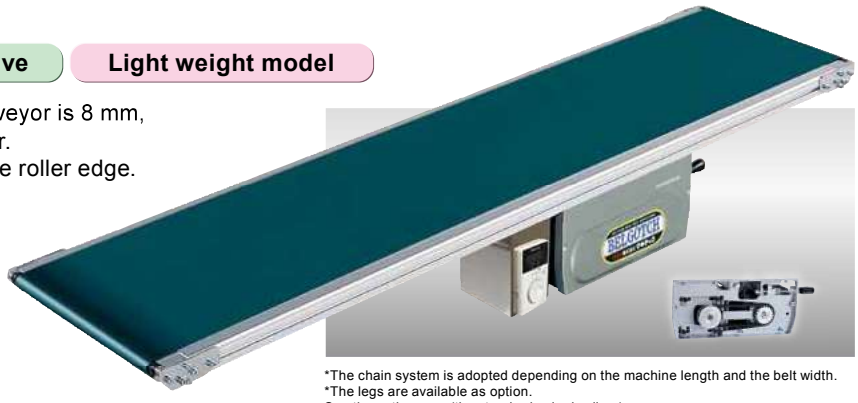

*The chain system is adopted depending on the machine length and the belt width.
*The legs are available as option.
See the option page(the standard color is silver).

SELECT How to select a model

Type34 - RG1-W - 250 - 3,500 - T3 - A60

- Type34: Number/ frame thickness (mm)
- RG1-W: RG: Roller edge meander-less/ model name
  1: Center drive
  RG1-I: One side (entrance side roller edge)
  RG1-O: One side (exit side roller edge)
  RG1-W: Both side roller edge
- 250: Belt width (mm)
- 3,500: Machine length (mm)
- T3: Constant speed/T Speed change/B Number/ speed symbol
- A60: A (100 VAC, single phase) B (200 VAC, single phase) C (200 VAC, three phase) Number/motor output (60W • 90W • 120W)

SIZE Standard specifications

(Unit: mm)

Belt width (nominal)	100	150	200	250	300	400	500
Machine width	140	190	240	290	340	440	540
Machine length	1,000	1,500	2,000	2,500	3,000		

Machine height 169
Belt speed Constant speed
Speed change
Transport capacity 15 kg/unit (when the loads are dispersed horizontally), up to 300 W
10 kg/unit (when the loads are dispersed horizontally), 400 W
8 kg/unit (when the loads are dispersed horizontally), 500 W
Rated output Constant speed 60 W, 90 W
Speed change 120 W

Power 100 VAC (single phase)
200 VAC (single phase)
200 VAC (three phase)
Belt (standard) Polyurethane belt (Green color, compliant with food standards, antistatic treatment done)
Option Legs, guide, etc.

- The actual belt width becomes narrower than the above nominal belt width by 10 mm.
- The standard type has a roller edge on both sides.
- When bag items are to be carried, the transport capacity must be set to 40% or below.

DRAWING

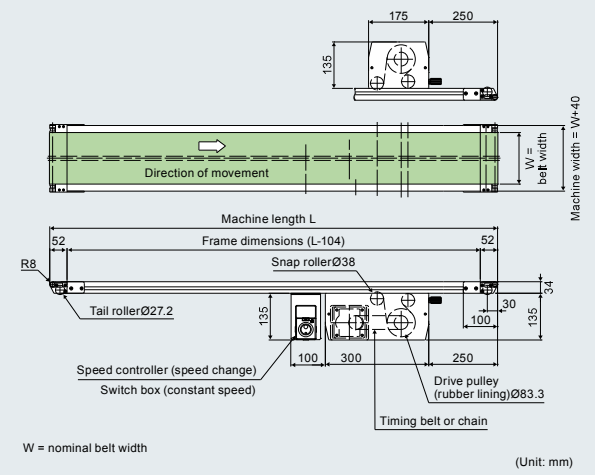

DATA

Belt speed table

Reduction ratio	Speed symbol	Constant speed (m/min) 50/60(Hz)	Reduction ratio	Speed symbol	Speed change (m/min) 50・60(Hz)
1/180	T1	2.0/2.5	1/200	B1	0.1～3.7
1/150	T2	2.5/2.9			
1/120	T3	3.1/3.7	1/100	B2	0.2～7.4
1/100	T4	3.7/4.4			
1/90	T5	3.1/4.9			
1/75	T6	4.9/5.9			
1/60	T7	6.1/7.4	1/50	B3	0.4～14.9
1/50	T8	7.4/8.8			
1/36	T9	10.2/12.3			
1/30	T10	12.3/14.7	1/30	B4	0.7～24.8
1/25	T11	14.7/17.7			

■ The constant belt speed is calculated by the motor speed of 1,500/1,800 rpm (50/60 Hz), drive pulley diameter of Ø 83.3, and drive efficiency of 95%.
■ The change belt speed is calculated by the motor speed of 80 rpm to 3,000 rpm (50・60 Hz), drive pulley diameter of Ø 83.3, and drive efficiency of 95%.
■ The speed change type is recommended when the speed needs to be selected accurately.
■ Speed change 120 W and speed symbols B1 to B4 are chain drive. Others are timing belt drive.

Standard setting motor output table

(mm)

Machine length \ Belt width	100~200	250~300	400~500
1,000~3,000	Constant speed 60 W Speed change 120 W		Constant speed 90 W Speed change 120 W

Switch box projection dimension

(mm)

Nominal belt width	100
Projection dimension	18

*Common to constant speed and speed change

Motor projection dimension

●Constant speed (mm)

Motor output \ Belt width	100	150
60W	85	35
90W	100	50

●Speed change (mm)

Motor output \ Belt width	100	150
120W	14(2) ((20))	–

*( ) For a reduction ratio of 1/20
*(( )) For a reduction ratio of 1/200

Roller edge part

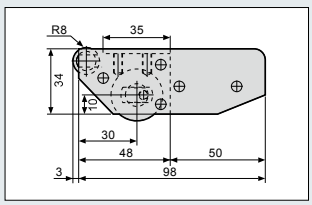

TYPE 34-K1 Knife edge model

34-frame

Aluminum frame **Center drive** **Light weight model**

The 3-mm end R has a sharp edge, and the model allows smooth transfer of small things that are about 20 mm.
The standard specification has a knife edge on one side.

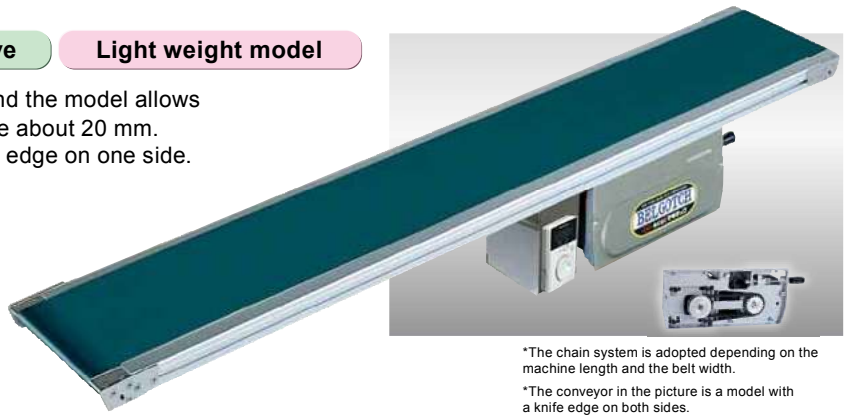

*The chain system is adopted depending on the machine length and the belt width.
*The conveyor in the picture is a model with a knife edge on both sides.
*The legs are available as option.
See the option page(the standard color is silver).

SELECT How to select a model

Type34	K1-O	250	3,500	T3	C60
Number/ frame thickness (mm)	K: Knife edge model 1: Center drive K1- I: One side (entrance side knife edge) K1-O: One side (exit side knife edge) K1-W: Both side knife edge	Belt width (mm)	Machine length (mm)	Constant speed/T Speed change/B Number/ speed symbol	A (100 VAC, single phase) B (200 VAC, single phase) C (200 VAC, three phase) Number/motor output (60 W/90 W/120 W)

SIZE Standard specifications

(Unit: mm)

Belt width (nominal)	100	150	200	250	300	400	500
Machine width	140	190	240	290	340	440	540
Machine length	1,000	1,500	2,000	2,500	3,000		

*In the case of the model with a knife edge on both sides, the maximum belt width is 300 and the maximum machine length is 3,000.

Machine height 169
Belt speed Constant speed / Speed change
Transport capacity 10 kg/unit (when the loads are dispersed horizontally)
Rated output Constant speed 60 W, 90 W / Speed change 120 W
Power 100 VAC (single phase) / 200 VAC (single phase) / 200 VAC (three phase)
Belt (standard) Polyurethane belt (Green color, compliant with food standards, antistatic treatment done)
Option Legs, guide, etc.

- The actual belt width becomes narrower than the above nominal belt width by 10 mm.
- When bag items are to be carried, the transport capacity must be set to 40% of the above or below.

DRAWING

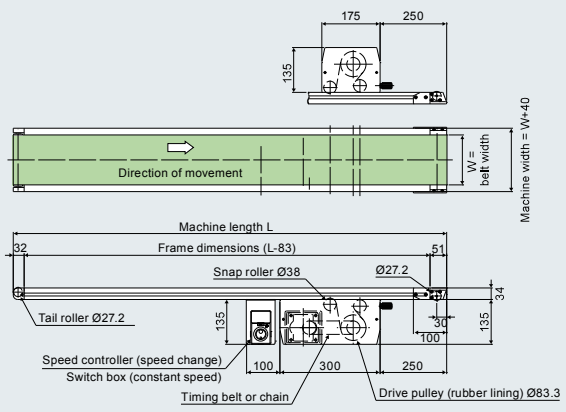

W = nominal belt width

(Unit: mm)

DATA

Belt speed table

Reduction ratio	Speed symbol	Constant speed (m/min) 50/60(Hz)	Reduction ratio	Speed symbol	Speed change (m/min) 50・60(Hz)
1/180	T1	2.0/2.5	1/200	B1	0.1～3.7
1/150	T2	2.5/2.9			
1/120	T3	3.1/3.7	1/100	B2	0.2～7.4
1/100	T4	3.7/4.4			
1/90	T5	3.1/4.9			
1/75	T6	4.9/5.9			
1/60	T7	6.1/7.4	1/50	B3	0.4～14.9
1/50	T8	7.4/8.8			
1/36	T9	10.2/12.3			
1/30	T10	12.3/14.7	1/30	B4	0.7～24.8
1/25	T11	14.7/17.7			

■ The constant belt speed is calculated by the motor speed of 1,500/1,800 rpm (50/60 Hz), drive pulley diameter of Ø 83.3, and drive efficiency of 95%.
■ The change belt speed is calculated by the motor speed of 80 rpm to 3,000 rpm (50・60 Hz), drive pulley diameter of Ø 83.3, and drive efficiency of 95%.
■ The speed change type is recommended when the speed needs to be selected accurately.
■ Speed change 120 W and speed symbols B1 to B4 are chain drive ▭. Others are timing belt drive.

Standard setting motor output table

(mm)

Machine length \ Belt width	100~200	250~300	400~500
1,000~3,000	Constant speed 60 W Speed change 120 W		Constant speed 90 W Speed change 120 W

Switch box projection dimension

(mm)

Nominal belt width	100
Projection dimension	18

*Common to constant speed and speed change

Motor projection dimension

●Constant speed (mm)

Motor output \ Belt width	100	150
60W	85	35
90W	100	50

●Speed change (mm)

Motor output \ Belt width	100	150
120W	14(2) ((20))	–

*( ) For a reduction ratio of 1/20
*(( )) For a reduction ratio of 1/200

Knife edge part

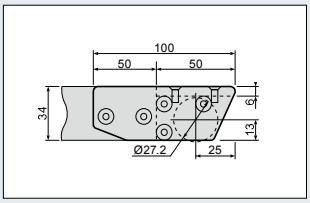

TYPE 34-J1 Joint model

34-frame

Aluminum frame | Center drive | Light weight model

A model with a short machine length that is optimum for connecting conveyance between processes.
The minimum machine length is 300 mm.

*The timing belt system is adopted for the constant speed and speed change of 60 W.
*The chain system is adopted depending on the machine length and the belt width.

*The legs are available as option. See the option page (the standard color is silver).

SELECT How to select a model

Type34	J1	100	300	B3	B60
Number/ frame thickness (mm)	J: Joint/ model name 1: Center drive	Belt width (mm)	Machine length (mm)	Constant speed/T Speed change/B Number/ speed symbol	A (100 VAC, single phase) B (200 VAC, single phase) C (200 VAC, three phase) Number/motor output (25 W/40 W/60 W)

SIZE Standard specifications

(Unit: mm)

Belt width (nominal)	50	75	100	150	200		
	250	300	350	400	500		
Machine width	90	115	140	190	240		
	290	340	390	440	540		
Machine length	300	500	1,000	1,500	2,000	2,500	3,000

Machine height 250
Belt speed Constant speed / Speed change
Transport capacity 15 kg/unit (when the loads are dispersed horizontally)
Rated output Constant speed 25 W, 40 W / Speed change 60 W
Power 100 VAC (single phase) / 200 VAC (single phase) / 200 VAC (three phase)
Belt (standard) Polyurethane belt (Green color, compliant with food standards, antistatic treatment done)
Option Legs, guide, etc.

- The actual belt width becomes narrower than the above nominal belt width by 5 mm.
- When bag items are to be carried, the transport capacity must be set to 40% of the above or below.

DRAWING

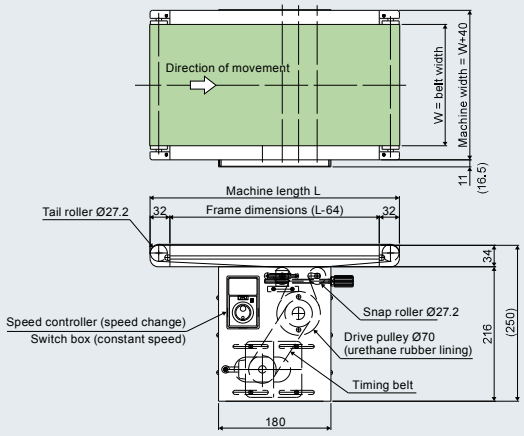

W = nominal belt width
( ) Speed change BMU dimension

(Unit: mm)

DATA

Belt speed table

Reduction ratio	Speed symbol	Constant speed (m/min) 50/60(Hz)	Reduction ratio	Speed symbol	Speed change (m/min) 50・60(Hz)
1/180	T1	1.7/2.1	1/200	B1	0.1～3.1
1/150	T2	2.1/2.3			
1/120	T3	2.6/3.1			
1/100	T4	3.1/3.7	1/100	B2	0.2～6.3
1/90	T5	3.5/4.1			
1/75	T6	4.2/5.0			
1/60	T7	5.2/6.2	1/50	B3	0.3～12.5
1/50	T8	6.2/7.5			
1/36	T9	8.7/10.4			
1/30	T10	10.4/12.5	1/30	B4	0.6～20.8
1/25	T11	12.6/15.0			
1/18	T12	17.4/21.0			
1/15	T13	21.0/25.0	1/20	B5	0.9～31.3
1/12.5	T14	25.0/30.0			
1/9	T15	34.6/41.7	1/15	B6	1.1～41.7

■ The constant belt speed is calculated by the motor speed of 1,500/1,800 rpm (50/60 Hz), drive pulley diameter of Φ 70, and drive efficiency of 95%.
■ The belt speed of speed change is calculated by the motor speed of 80 rpm to 3,000 rpm (50・60 Hz), drive pulley diameter of Φ 70, and drive efficiency of 95%.
■ The speed change type is recommended when the speed needs to be selected accurately.
■ The pulley and the motor work together by the timing belt system in the case of a constant speed and a speed change BMU 60 W motor.

Standard setting motor output table

(mm)

Machine length \ Belt width	50～200	250～500
300～3,000	Constant speed 25 W speed change 60 W	Constant speed 40 W speed change 60 W

Motor projection dimension

●Constant speed (mm)

Motor output \ Belt width	50	75	100
25W	62.5(52)	37.5(27)	12.5(2)
40W	100(82)	75(57)	50(32)

*( ) For a reduction ratio of 1/9 to 1/18

●Speed change (mm)

Motor output \ Belt width	50	75
60W	32(27) ((37))	7(1) ((12))

*( ) For a reduction ratio of 1/15 or 1/20
*(( )) For a reduction ratio of 1/200

Controller projection dimension

(mm)

Nominal belt width	50	75
Projection dimension for constant speed	5	0
Projection dimension for speed change	40	15

*Dimension of the exposed wiring is not included.

TYPE 34-JG1 Joint model

34-frame

Aluminum frame | Center drive | Light weight model

The meander-less model of the joint model TYPE 34-J1.
It supports severe conditions such as forward and reverse operations and installation to places where it is difficult to perform maintenance inspection.

*The chain system is adopted depending on the machine length and the belt width.

*The legs are available as option. See the option page (the standard color is silver).

SELECT How to select a model

Type34	JG1	150	500	B6	C60
Number/ frame thickness (mm)	JG: Joint meander-less/ model name 1: Center drive	Belt width (mm)	Machine length (mm)	Constant speed/T Speed change/B Number/ speed symbol	A (100 VAC, single phase) B (200 VAC, single phase) C (200 VAC, three phase) Number/motor output (40 W/60 W/120 W)

SIZE Standard specifications

(Unit: mm)

Belt width (nominal)	75	100	150	200	250		
	300	350	400	500			
Machine width	115	140	190	240	290		
	340	390	440	540			
Machine length	300	500	1,000	1,500	2,000	2,500	3,000

Machine height 250
Belt speed Constant speed / Speed change
Transport capacity 15 kg/unit (when the loads are dispersed horizontally)
Rated output Constant speed 40 W, 60 W / Speed change 60 W, 120 W
Power 100 VAC (single phase) / 200 VAC (single phase) / 200 VAC (three phase)
Belt (standard) Polyurethane belt (Green color, compliant with food standards, antistatic treatment done)
Option Legs, guide, etc.

- The actual belt width becomes narrower than the above nominal belt width by 5 mm.
- When bag items are to be carried, the transport capacity must be set to 40% of the above or below.

DRAWING

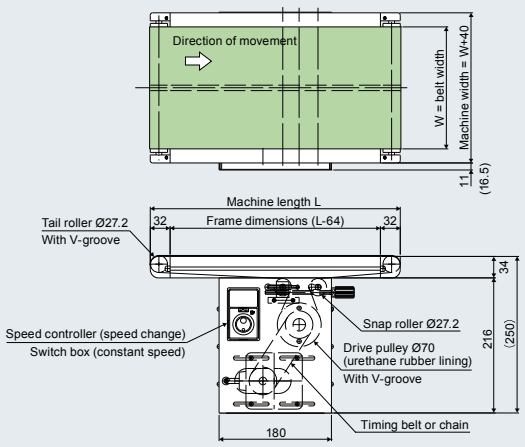

W = nominal belt width
( ) Speed change BMU dimension

(Unit: mm)

DATA

Belt speed table

Reduction ratio	Speed symbol	Constant speed (m/min) 50/60(Hz)	Reduction ratio	Speed symbol	Speed change (m/min) 50・60(Hz)
1/180	T1	1.7/2.1	1/200	B1	0.1～3.1
1/150	T2	2.1/2.3			
1/120	T3	2.6/3.1			
1/100	T4	3.1/3.7	1/100	B2	0.2～6.3
1/90	T5	3.5/4.1			
1/75	T6	4.2/5.0			
1/60	T7	5.2/6.2	1/50	B3	0.3～12.5
1/50	T8	6.2/7.5			
1/36	T9	8.7/10.4			
1/30	T10	10.4/12.5	1/30	B4	0.6～20.8
1/25	T11	12.6/15.0			
1/18	T12	17.4/21.0			
1/15	T13	21.0/25.0	1/20	B5	0.9～31.3
1/12.5	T14	25.0/30.0			
1/9	T15	34.6/41.7	1/15	B6	1.1～41.7

■ The constant belt speed is calculated by the motor speed of 1,500/1,800 rpm (50/60 Hz), drive pulley diameter of Ø 70, and drive efficiency of 95%.
■ The change belt speed is calculated by the motor speed of 80 rpm to 3,000 rpm (50・60 Hz), drive pulley diameter of Ø 70, and drive efficiency of 95%.
■ The speed change type is recommended when the speed needs to be selected accurately.
■ Speed change 120 W and speed symbols B1 to B4 are chain drive ▭. Others are timing belt drive.

Standard setting motor output table

(mm)

Machine length \ Belt width	75～250	300～500
300～3,000	Constant speed 40 W speed change 60 W	Constant speed 60 W speed change 120 W

Motor projection dimension

●Constant speed (mm)

Motor output \ Belt width	75	100	150
40W	75(57)	50(32)	—
60W	101	76	26

*( ) For a reduction ratio of 1/9 to 1/18

●Speed change (mm)

Motor output \ Belt width	75
60W	—
120W	6(0)((12))

*( ) For a reduction ratio of 1/15 or 1/20
*(( )) For a reduction ratio of 1/200

Controller projection dimension (mm)

Nominal belt width	75
Projection dimension	15

*Dimension of the exposed wiring is not included.

TYPE 34-S2 Standard model

34-frame

Aluminum frame | **Head drive** | **Light weight model**

The roller does not roll in the belt surface, and the conveyor is suitable for carrying items that get dirty easily.The upper part drive type should be used when there is a small amount of water or oil.

*The chain system is adopted for the belt width of 50 W and 75 W.
*The effective clearance from the motor to the belt upper surface of the upper part drive type is 100 mm (95 mm in the case of 120 W).
*The legs are available as option.
See the option page (the standard color is silver).

Standard belt (enlarged view)

Drive part position

Upper part drive type (U)

Lower part drive type (D)

*The effective clearance from the motor to the belt upper surface of the upper part drive type is 100 mm (95 mm in the case of 120 W).

The speed change model equipped with a brushless DC motor and a control unit as standard.

The maximum rotation speed of 4,000 r/min and a velocity ratio of 1:37.5 (80 to 3,000 r/min) can be set.
The motor speed is displayed on the monitor.

SELECT How to select a model

Type34 - S2U - 200 - 1,000 - B4 - A60

Type34	S2U	200	1,000	B4	A60
Number/ frame thickness (mm)	S: Standard/ model name 2: Head drive U: Upper part drive type D: Lower part drive type	Belt width (mm)	Machine length (mm)	Constant speed/T Speed change/B Number/ speed symbol	A (100 VAC, single phase) B (200 VAC, single phase) C (200 VAC, three phase) Number/motor output (40 W/60 W/120 W)

SIZE Standard specifications

(Unit: mm)

Belt width (nominal)	50	75	100	150	200	250	300	350	400	500	600
Machine width	90	115	140	190	240	290	340	390	440	540	640
Machine length	1,000	1,500	2,000	2,500	3,000	3,500	4,000	4,500	5,000	5,500	6,000

Machine height 280
Belt speed Constant speed / Speed change
Transport capacity See the transport capacity graph.
Rated output Constant speed 40 W, 60 W / Speed change 60 W, 120 W
Power 100 VAC (single phase) / 200 VAC (single phase) / 200 VAC (three phase)
Belt (standard) Polyurethane belt (Green color, compliant with food standards, antistatic treatment done)
Option Legs, guide, etc.

●The actual belt width becomes narrower than the above belt width by 5 mm, and by 10 mm when the machine length of 4 m is exceeded and in the case of models with a belt width of 500 and 600.

DRAWING

(Unit: mm)

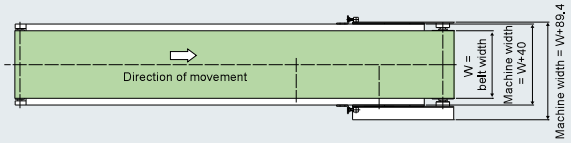

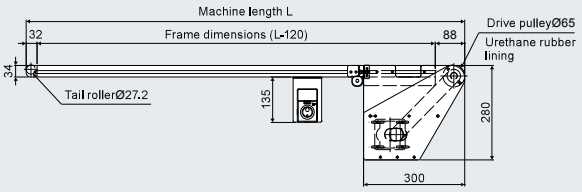

(W = nominal belt width)

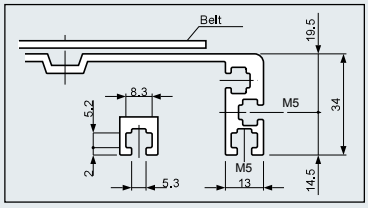

Frame cross section

DATA

Transport capacity graph (constant speed)

machine length 3,000, belt width 300

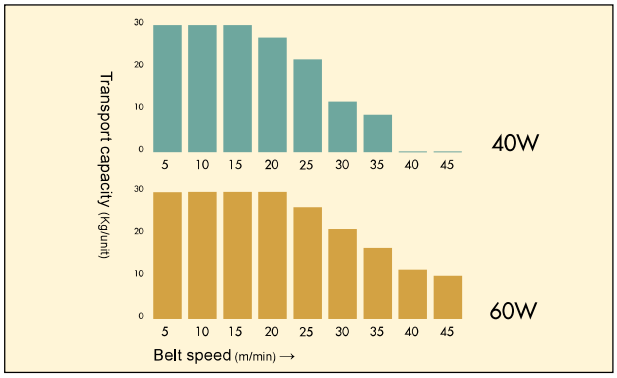

■ The graph shows the capacity when the loads are dispersed horizontally. Carry items at the setting of 40% or below.
■ The transport capacity fluctuates depending on various factors.

Belt speed table

Reduction ratio	Speed symbol	Constant speed (m/min) 50/60(Hz)	Reduction ratio	Speed symbol	Speed change (m/min) 50・60(Hz)
1/180	T1	1.6/1.9	1/200	B1	0.08～2.9
1/150	T2	1.9/2.3			
1/120	T3	2.4/2.9			
1/100	T4	2.9/3.5	1/100	B2	0.2～5.8
1/90	T5	3.2/3.9			
1/75	T6	3.9/4.6			
1/60	T7	4.8/5.8	1/50	B3	0.3～11.6
1/50	T8	5.8/7.0			
1/36	T9	8.1/9.7			
1/30	T10	9.7/11.6	1/30	B4	0.5～19.3
1/25	T11	11.6/14.0			
1/18	T12	16.2/19.4			
1/15	T13	19.4/23.3	1/20	B5	0.8～29.1
1/12.5	T14	23.3/27.9			
1/9	T15	32.3/38.8	1/15	B6	1.0～38.7

■ The constant belt speed is calculated by the motor speed of 1,500/1,800 rpm (50/60 Hz), drive pulley diameter of Ø 65, and drive efficiency of 95%.
■ The belt speed of speed change is calculated by the motor speed of 80 rpm to 3,000 rpm (50・60 Hz), drive pulley diameter of Ø 65, and drive efficiency of 95%.
■ The speed change type is recommended when the speed needs to be selected accurately.
■ Speed change 120 W and speed symbols B1 to B4 are chain drive [ ]. Others are timing belt drive.

Standard setting motor output table (mm)

Machine length \ Belt width	50~300	350~600
1,000~6,000	Constant speed 40 W Speed change 60 W	Constant speed 60 W Speed change 120 W

Switch box projection dimension (mm)

Nominal belt width	50	75	100
Projection dimension	68	43	18

*Common to constant speed and speed change

Motor projection dimension

●Constant speed (mm)

Motor output \ Belt width	50	75	100	150
40W	75(55)	50(30)	23(5)	—
60W	—	74	50	—
90W	—	89	64	14

*( ) For a reduction ratio of 1/9 to 1/18

●Speed change (mm)

Motor output \ Belt width	50	75
60W	4(3) ((10))	—
120W	25(12) ((32))	1(0) ((7))

*( ) For a reduction ratio of 1/15 or 1/20
*(( )) For a reduction ratio of 1/200

TYPE 34-G2 Meander-less model

34-frame

Aluminum frame | **Head drive** | **Light weight model**

The roller does not roll in the belt surface, and the conveyor is suitable for carrying items that get dirty easily. It also uses a belt with a guide and is suitable for conditions when the belt adjustment is difficult.

*The chain system is adopted for the belt width of 50 W and 75 W.
*The effective clearance from the motor to the belt upper surface of the upper part drive type is 100 mm (95 mm in the case of 120 W).
*The legs are available as option.
See the option page (the standard color is silver).

Standard belt (enlarged view)

Drive part position

Upper part drive type (U)

Lower part drive type (D)

*The effective clearance from the motor to the belt upper surface of the upper part drive type is 100 mm (95 mm in the case of 120 W).

The speed change model equipped with a brushless DC motor and a control unit as standard.

The maximum rotation speed of 4,000 r/min and a velocity ratio of 1:37.5 (80 to 3,000 r/min) can be set.
The motor speed is displayed on the monitor.

SELECT How to select a model

Type34 - G2D - 300 - 2,500 - T3 - C60

Type34	G2D	300	2,500	T3	C60
Number/ frame thickness (mm)	G: Meander-less/ model name 2: Head drive U: Upper part drive type D: Lower part drive type	Belt width (mm)	Machine length (mm)	Constant speed/T Speed change/B Number/ speed symbol	A (100 VAC, single phase) B (200 VAC, single phase) C (200 VAC, three phase) Number/motor output (40 W/60 W/120 W)

SIZE Standard specifications

(Unit: mm)

Belt width (nominal)	50	75	100	150	200	250	300	350	400	500	600
Machine width	90	115	140	190	240	290	340	390	440	540	640
Machine length	1,000	1,500	2,000	2,500	3,000	3,500	4,000	4,500	5,000	5,500	6,000

Machine height 280
Belt speed Constant speed / Speed change
Transport capacity See the transport capacity graph.
Rated output Constant speed 40 W, 60 W / Speed change 60 W, 120 W
Power 100 VAC (single phase) / 200 VAC (single phase) / 200 VAC (three phase)
Belt (standard) Polyurethane belt with guide (Green color, compliant with food standards, antistatic treatment done)
Option Legs, guide, etc.

●The actual belt width becomes narrower than the above belt width by 5 mm, and by 10 mm when the machine length of 4 m is exceeded and in the case of models with a belt width of 500 and 600.

DRAWING

(Unit: mm)

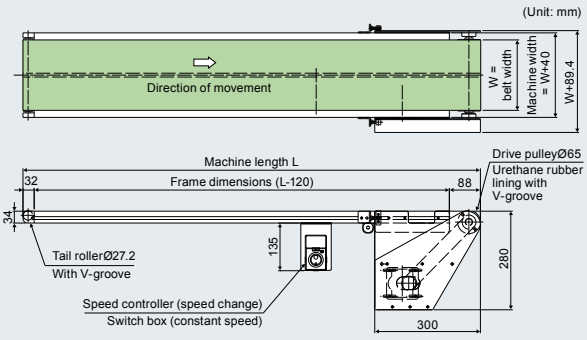

(W = nominal belt width)

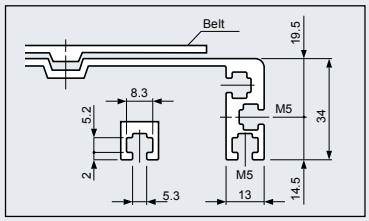

Frame cross section

DATA

Transport capacity graph (constant speed)

machine length 3,000, belt width 300

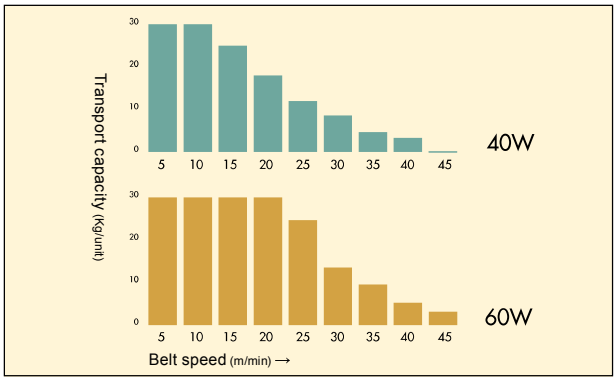

■ The graph shows the capacity when the loads are dispersed horizontally.
Carry items at the setting of 40% or below.
■ The transport capacity fluctuates depending on various factors.

Belt speed table

Reduction ratio	Speed symbol	Constant speed (m/min) 50/60(Hz)	Reduction ratio	Speed symbol	Speed change (m/min) 50・60(Hz)
1/180	T1	1.6/1.9	1/200	B1	0.08～2.9
1/150	T2	1.9/2.3			
1/120	T3	2.4/2.9			
1/100	T4	2.9/3.5	1/100	B2	0.2～5.8
1/90	T5	3.2/3.9			
1/75	T6	3.9/4.6			
1/60	T7	4.8/5.8	1/50	B3	0.3～11.6
1/50	T8	5.8/7.0			
1/36	T9	8.1/9.7			
1/30	T10	9.7/11.6	1/30	B4	0.5～19.3
1/25	T11	11.6/14.0			
1/18	T12	16.2/19.4			
1/15	T13	19.4/23.3	1/20	B5	0.8～29.1
1/12.5	T14	23.3/27.9			
1/9	T15	32.3/38.8	1/15	B6	1.0～38.7

■ The constant belt speed is calculated by the motor speed of 1,500/1,800 rpm (50/60 Hz), drive pulley diameter of Ø 65, and drive efficiency of 95%.
■ The belt speed of speed change is calculated by the motor speed of 80 rpm to 3,000 rpm (50・60 Hz), drive pulley diameter of Ø 65, and drive efficiency of 95%.
■ The speed change type is recommended when the speed needs to be selected accurately.
■ Speed change 120 W and speed symbols B1 to B4 are chain drive ▭. Others are timing belt drive.

Standard setting motor output table (mm)

Machine length \ Belt width	50～250	300～600
1,000～6,000	Constant speed 40 W Speed change 60 W	Constant speed 60 W Speed change 120 W

Switch box projection dimension (mm)

Nominal belt width	50	75	100
Projection dimension	68	43	18

*Common to constant speed and speed change

Motor projection dimension

●Constant speed (mm)

Motor output \ Belt width	50	75	100	150
40W	75(55)	50(30)	23(5)	—
60W	—	74	50	—
90W	—	89	64	14

*( ) For a reduction ratio of 1/9 to 1/18

●Speed change (mm)

Motor output \ Belt width	50	75
60W	4(3)	—
120W	25(12) ((32))	1(0) ((8))

*( ) For a reduction ratio of 1/15 or 1/20
*(( )) For a reduction ratio of 1/200

TYPE 34-D2 Belt cleat model

34-frame

Aluminum frame | **Head drive** | **Light weight model**

A belt cleat and a guide (with a height of 30 mm) are used as standard.
The conveyor can be used for inclined conveyance of bulk solids and things with an unstable shape or for pitch feeding at a horizontal surface.

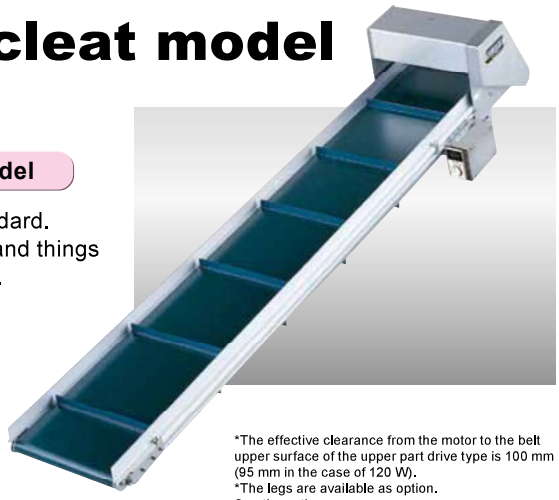

*The effective clearance from the motor to the belt upper surface of the upper part drive type is 100 mm (95 mm in the case of 120 W).
*The legs are available as option.
See the option page
(the standard color is silver).

Standard belt (enlarged view)

Drive part position

Upper part drive type (U)

Lower part drive type (D)

*The effective clearance from the motor to the belt upper surface of the upper part drive type is 100 mm (95 mm in the case of 120 W).

The speed change model equipped with a brushless DC motor and a control unit as standard.

The maximum rotation speed of 4,000 r/min and a velocity ratio of 1:37.5 (80 to 3,000 r/min) can be set.
The motor speed is displayed on the monitor.

SELECT How to select a model

Type34	D2U	250	1,500	T5	B60
Number/ frame thickness (mm)	D: Belt cleat/ model name 2: Head drive U: Upper part drive type D: Lower part drive type	Belt width (mm)	Machine length (mm)	Constant speed/T Speed change/B Number/ speed symbol	A (100 VAC, single phase) B (200 VAC, single phase) C (200 VAC, three phase) Number/motor output (60 W/120 W)

SIZE Standard specifications

(Unit: mm)

Belt width (nominal)	100	150	200	250	300	350	400	500
Machine width	140	190	240	290	340	390	440	540
Machine length	1,000		1,500	2,000		2,500		3,000

Machine height 280
Belt speed Constant speed / Speed change
Transport capacity See the transport capacity graph.
Rated output Constant speed 60 W / Speed change 120 W
Power 100 VAC (single phase) / 200 VAC (single phase) / 200 VAC (three phase)
Belt (standard) Polyurethane belt cleat (Green color, compliant with food standards, antistatic treatment done)
Option Legs, etc.

●The actual belt width becomes narrower than the above nominal belt width by 5 mm.

DRAWING

(Unit: mm)

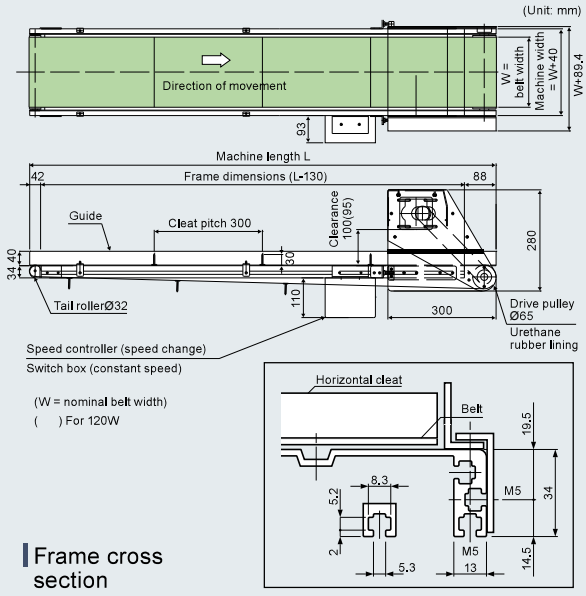

Frame cross section

DATA

Transport capacity graph (at the time of constant speed and inclination angle of 20°)

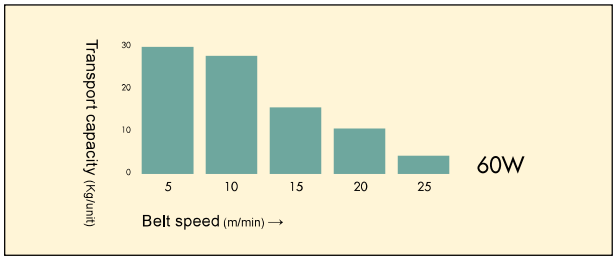

■ The graph shows the capacity when the loads are dispersed. Carry items at the setting of 40% or below.
■ The transport capacity fluctuates depending on various factors.
■ Weight of items to be carried: 10 kg/m at max.

DATA

Belt speed table

Reduction ratio	Speed symbol	Constant speed (m/min) 50/60(Hz)	Reduction ratio	Speed symbol	Speed change (m/min) 50・60(Hz)
1/180	T1	1.6/1.9	1/200	B1	0.08～2.9
1/150	T2	1.9/2.3			
1/120	T3	2.4/2.9	1/100	B2	0.2～5.8
1/100	T4	2.9/3.5			
1/90	T5	3.2/3.9			
1/75	T6	3.9/4.6			
1/60	T7	4.8/5.8	1/50	B3	0.3～11.6
1/50	T8	5.8/7.0			
1/36	T9	8.1/9.7			
1/30	T10	9.7/11.6	1/30	B4	0.5～19.3
1/25	T11	11.6/14.0			
1/18	T12	16.2/19.4			
1/15	T13	19.4/23.3	1/20	B5	0.8～29.1
1/12.5	T14	23.3/27.9			

■ The constant belt speed is calculated by the motor speed of 1,500/1,800 rpm (50/60 Hz), drive pulley diameter of Ø 65, and drive efficiency of 95%.
■ The belt speed of speed change is calculated by the motor speed of 80 rpm to 3,000 rpm (50・60 Hz), drive pulley diameter of Ø 65, and drive efficiency of 95%.
■ The speed change type is recommended when the speed needs to be selected accurately.
■ Speed change 120 W and speed symbols B1 to B4 are chain drive ▭. Others are timing belt drive.

Standard setting motor output table

(mm)

Machine length \ Belt width	100～500
1,000～3,000	Constant speed 60 W Speed change 120 W

Motor projection dimension

●Constant speed (mm)

Motor output \ Belt width	100	150
60W	45	–

*In the case of speed change, there is no motor projection.

Belt cleat dimension (standard item)

(The cleat pitch is around 300 mm when the entire belt is divided equally.)

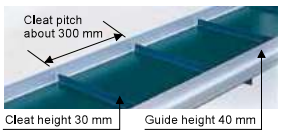

●Cleat dimensions below can also be made. (mm)

Pitch	100・150・200・250・400
Height	10・20・40

TYPE 34-V2 Troughed belt model

34-frame

Aluminum frame | **Head drive** | **Light weight model**

The hull-shaped belt type model that can carry small things and particulate works that are likely to be spilled without fail.
The upper part drive type should be used when the items to be carried contain water or oil.

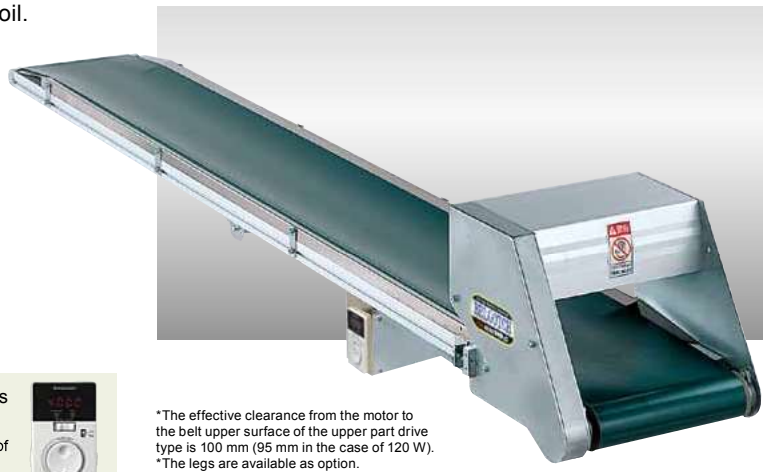

*The effective clearance from the motor to the belt upper surface of the upper part drive type is 100 mm (95 mm in the case of 120 W).
*The legs are available as option.
See the option page
(the standard color is silver)

Drive part position

Upper part drive type (U)

Lower part drive type (D)

*The effective clearance from the motor to the belt upper surface of the upper part drive type is 100 mm (95 mm in the case of 120 W).

The speed change model equipped with a brushless DC motor and a control unit as standard.

The maximum rotation speed of 4,000 r/min and a velocity ratio of 1:37.5 (80 to 3,000 r/min) can be set.
The motor speed is displayed on the monitor.

SELECT How to select a model

Type34 - V2U - 400 - 3,000 - T7 - C60

Type34	V2U	400	3,000	T7	C60
Number/ frame thickness (mm)	V: Troughed belt/ model name 2: Head drive U: Upper part drive type D: Lower part drive type	Belt width (mm)	Machine length (mm)	Constant speed/T Speed change/B Number/ speed symbol	A (100 VAC, single phase) B (200 VAC, single phase) C (200 VAC, three phase) Number/motor output (60 W/120 W)

SIZE Standard specifications

(Unit: mm)

Belt width (nominal)	200	250	300	350	400	500
Machine width	240	290	340	390	440	540
Machine length	1,000～5,000					

Machine height 280
Belt speed Constant speed / Speed change
Transport capacity 25 kg/unit (when the loads are dispersed horizontally)
Rated output Constant speed 60 W / Speed change 120 W
Power 100 VAC (single phase) / 200 VAC (single phase) / 200 VAC (three phase)
Belt (standard) Polyurethane belt (Green color, compliant with food standards, antistatic treatment done)
Option Legs, guide, etc.

●The actual belt width becomes narrower than the above nominal belt width by 10 mm.
●The transport capacity fluctuates depending on various factors.

DRAWING

(Unit: mm)

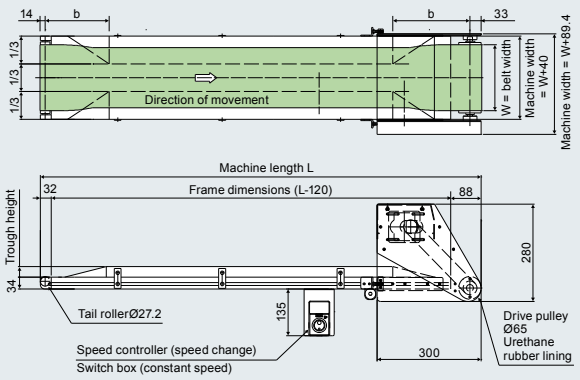

(W = nominal belt width)

DATA

Belt speed table

Reduction ratio	Speed symbol	Constant speed (m/min) 50/60(Hz)	Reduction ratio	Speed symbol	Speed change (m/min) 50・60(Hz)
1/180	T1	1.6/1.9	1/200	B1	0.08～2.9
1/150	T2	1.9/2.3			
1/120	T3	2.4/2.9	1/100	B2	0.2～5.8
1/100	T4	2.9/3.5			
1/90	T5	3.2/3.9			
1/75	T6	3.9/4.6			
1/60	T7	4.8/5.8	1/50	B3	0.3～11.6
1/50	T8	5.8/7.0			
1/36	T9	8.1/9.7			
1/30	T10	9.7/11.6	1/30	B4	0.5～19.3
1/25	T11	11.6/14.0			
1/18	T12	16.2/19.4			
1/15	T13	19.4/23.3	1/20	B5	0.8～29.1
1/12.5	T14	23.3/27.9			

■ The constant belt speed is calculated by the motor speed of 1,500/1,800 rpm (50/60 Hz), drive pulley diameter of Ø 65, and drive efficiency of 95%.
■ The belt speed of speed change is calculated by the motor speed of 80 rpm to 3,000 rpm (50・60 Hz), drive pulley diameter of Ø 65, and drive efficiency of 95%.
■ The speed change type is recommended when the speed needs to be selected accurately.
■ Speed change 120 W and speed symbols B1 to B4 are chain drive . Others are timing belt drive.

Troughed part dimensions

(Unit: mm)

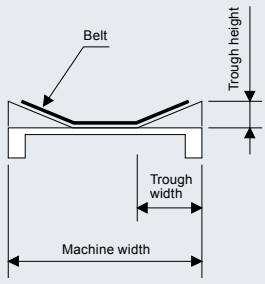

Belt width	Dimension b	Trough height	Trough width
200	170	22	80
250	175	25	100
300	210	30	115
350	245	35	130
400	280	40	150
500	350	45	180

TYPE 34-RG2 Roller edge meander-less model

34-frame

Aluminum frame | **Head drive** | **Light weight model**

The loading side of the conveyor is R8,
and the model allows smooth transfer.
Stable conveyance with less deviation is realized by adopting a meander-less belt for the roller edge.
Use the conveyor for connection to a large conveyor.
(The roller edge part is on one side only.)

*The effective clearance from the motor to the belt upper surface of the upper part drive type is 100 mm (95 mm in the case of 120 W).
*The legs are available as option.
See the option page
(the standard color is silver)

Drive part position

Upper part drive type (U)

Lower part drive type (D)

*The effective clearance from the motor to the belt upper surface of the upper part drive type is 100 mm (95 mm in the case of 120 W).

SELECT How to select a model

Type34	RG2D	050	2,000	T2	C60
Number/ frame thickness (mm)	RG: Roller edge/ model name 2: Head drive U: Upper part drive type D: Lower part drive type	Belt width (mm)	Machine length (mm)	Constant speed/T Speed change/B Number/ speed symbol	A (100 VAC, single phase) B (200 VAC, single phase) C (200 VAC, three phase) Number/motor output (60 W/90 W/120 W)

SIZE Standard specifications

(Unit: mm)

Belt width (nominal)	100	150	200	250	300	350	400	500
Machine width	140	190	240	290	340	390	440	540
Machine length	1,000		1,500		2,000		2,500	3,000

Machine height 280
Belt speed Constant speed
Speed change
Transport capacity 15 kg/unit (when the loads are dispersed horizontally), up to 300 W
10 kg/unit (when the loads are dispersed horizontally), 400 W
8 kg/unit (when the loads are dispersed horizontally), 500 W
Rated output Constant speed 60 W, 90 W
Speed change 120 W

Power 100 VAC (single phase)
200 VAC (single phase)
200 VAC (three phase)
Belt (standard) Polyurethane belt (White/green color, compliant with food standards, antistatic treatment done)
Option Legs, guide, etc.

- The actual belt width becomes narrower than the above nominal belt width by 10 mm.
- When bag items are to be carried, the transport capacity must be set to 40% of the above or below.

DRAWING

(Unit: mm)

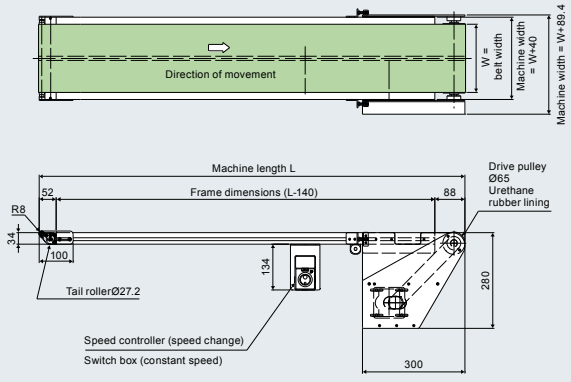

(W = nominal belt width)

DATA

Belt speed table

Reduction ratio	Speed symbol	Constant speed (m/min) 50/60(Hz)	Reduction ratio	Speed symbol	Speed change (m/min) 50・60(Hz)
1/180	T1	1.6/1.9	1/200	B1	0.08～2.9
1/150	T2	1.9/2.3			
1/120	T3	2.4/2.9	1/100	B2	0.2～5.8
1/100	T4	2.9/3.5			
1/90	T5	3.2/3.9			
1/75	T6	3.9/4.6			
1/60	T7	4.8/5.8	1/50	B3	0.3～11.6
1/50	T8	5.8/7.0			
1/36	T9	8.1/9.7			
1/30	T10	9.7/11.6	1/30	B4	0.5～19.3
1/25	T11	11.6/14.0			
1/18	T12	16.2/19.4			

■ The constant belt speed is calculated by the motor speed of 1,500/1,800 rpm (50/60 Hz), drive pulley diameter of Ø 65, and drive efficiency of 95%.
■ The belt speed of speed change is calculated by the motor speed of 80 rpm to 3,000 rpm (50・60 Hz), drive pulley diameter of Ø 65, and drive efficiency of 95%.
■ The speed change type is recommended when the speed needs to be selected accurately.
■ Speed change 120 W and speed symbols B1 to B4 are chain drive . Others are timing belt drive.

Standard setting motor output table

(mm)

Machine length \ Belt width	100～300	400～500
1,000～3,000	Constant speed 60 W Speed change 120 W	Constant speed 90 W Speed change 120 W

Switch box projection dimension

(mm)

Nominal belt width	100
Projection dimension	18

*Common to constant speed and speed change

Motor projection dimension

●Constant speed (mm)

Motor output \ Belt width	100	150
60W	45	—
90W	60	10

*In the case of speed change, there is no motor projection.

Roller edge part

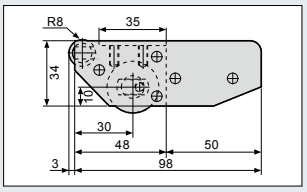

TYPE 34-K2 Knife edge model

34-frame

Aluminum frame **Head drive** **Light weight model**

A conveyor for carrying small things
(with a length of 20 or more)
that have an R3 plate used on the loading side.
(The knife edge part is on one side only.)

*The effective clearance from the motor to the belt upper surface of the upper part drive type is 100 mm (95 mm in the case of 120 W).
*The legs are available as option.
See the option page
(the standard color is silver).

Drive part position

Upper part drive type (U)

Lower part drive type (D)

*The effective clearance from the motor to the belt upper surface of the upper part drive type is 100 mm (95 mm in the case of 120 W).

SELECT How to select a model

Type34	K2U	350	3,000	T4	C90
Number/ frame thickness (mm)	K: Knife edge/ model name 2: Head drive U: Upper part drive type D: Lower part drive type	Belt width (mm)	Machine length (mm)	Constant speed/T Speed change/B Number/ speed symbol	A (100 VAC, single phase) B (200 VAC, single phase) C (200 VAC, three phase) Number/motor output (60 W/90 W/120 W)

SIZE Standard specifications

(Unit: mm)

Belt width (nominal)	100	150	200	250	300	350	400	500
Machine width	140	190	240	290	340	390	440	540
Machine length	1,000		1,500		2,000		2,500	3,000

Machine height 280
Belt speed Constant speed
Speed change
Transport capacity 10 kg/unit (when the loads are dispersed horizontally)
Rated output Constant speed 60 W, 90 W
Speed change 120 W
Power 100 VAC (single phase)
200 VAC (single phase)
200 VAC (three phase)
Belt (standard) Polyurethane belt (White/green color, compliant with food standards, antistatic treatment done)
Option Legs, guide, etc.

- The actual belt width becomes narrower than the above nominal belt width by 10 mm.
- When bag items are to be carried, the transport capacity must be set to 40% of the above or below.

DRAWING

(Unit: mm)

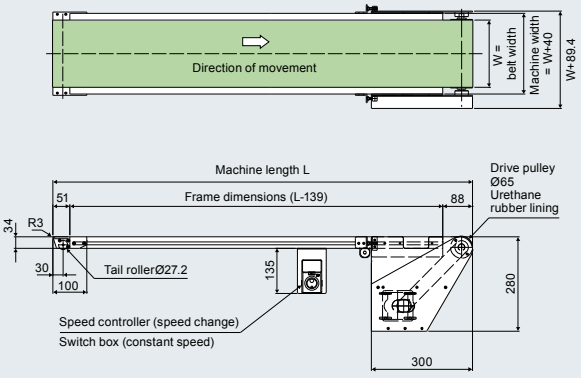

(W = nominal belt width)

DATA

Belt speed table

Reduction ratio	Speed symbol	Constant speed (m/min) 50/60(Hz)	Reduction ratio	Speed symbol	Speed change (m/min) 50・60(Hz)
1/180	T1	1.6/1.9	1/200	B1	0.08～2.9
1/150	T2	1.9/2.3			
1/120	T3	2.4/2.9	1/100	B2	0.2～5.8
1/100	T4	2.9/3.5			
1/90	T5	3.2/3.9			
1/75	T6	3.9/4.6			
1/60	T7	4.8/5.8	1/50	B3	0.3～11.6
1/50	T8	5.8/7.0			
1/36	T9	8.1/9.7			
1/30	T10	9.7/11.6	1/30	B4	0.5～19.3
1/25	T11	11.6/14.0			
1/18	T12	16.2/19.4			

■ The constant belt speed is calculated by the motor speed of 1,500/1,800 rpm (50/60 Hz), drive pulley diameter of Ø 65, and drive efficiency of 95%.
■ The belt speed of speed change is calculated by the motor speed of 80 rpm to 3,000 rpm (50・60 Hz), drive pulley diameter of Ø 65, and drive efficiency of 95%.
■ The speed change type is recommended when the speed needs to be selected accurately.
■ Speed change 120 W and speed symbols B1 to B4 are chain drive. Others are timing belt drive.

Standard setting motor output table

(mm)

Machine length \ Belt width	100～300	400～500
1,000～3,000	Constant speed 60 W Speed change 120 W	Constant speed 90 W Speed change 120 W

Switch box projection dimension

(mm)

Nominal belt width	100
Projection dimension	18

*Common to constant speed and speed change

Motor projection dimension

●Constant speed (mm)

Motor output \ Belt width	100	150
60W	45	—
90W	60	10

*In the case of speed change, there is no motor projection.

Knife edge part

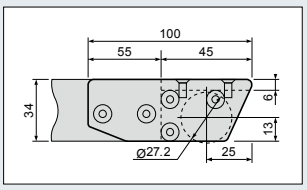

TYPE 60-S1 Standard model

60-frame

Aluminum frame | **Center drive** | **Light weight model**

The general-purpose model of the Belgotch series that uses a 60-frame with enhanced strength and have no projection to the frame side surface of the drive part.

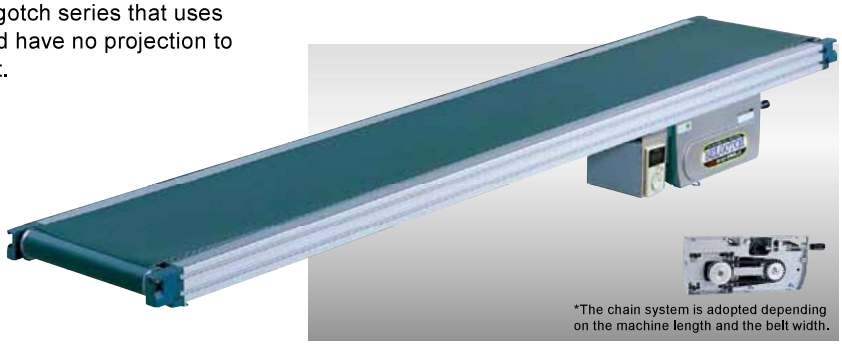
*The chain system is adopted depending on the machine length and the belt width.

*The legs are available as option. See the option page (the standard color is silver).

Standard belt (enlarged view)

SELECT How to select a model

Type60	S1	300	4,000	B4	C120
Number/ frame thickness (mm)	S: Standard/ model name 1: Center drive	Belt width (mm)	Machine length (mm)	Constant speed/T Speed change/B Number/ speed symbol	A (100 VAC, single phase) B (200 VAC, single phase) C (200 VAC, three phase) Number/motor output (60 W/90 W/120 W)

SIZE Standard specifications

(Unit: mm)

Belt width (actual dimension)	200	250	300	350	400	500	600	(700)	(800)
Machine width	280	330	380	430	480	580	680	(780)	(880)
Machine length	500	1,000	2,000	3,000	4,000	5,000	6,000	7,000	8,000

(The type with a belt width of 700 or 800 is a substandard item.)

Machine height 195
Belt speed Constant speed / Speed change
Transport capacity See the transport capacity graph.
Rated output Constant speed 60 W, 90 W / Speed change 120 W
Power 100 VAC (single phase) / 200 VAC (single phase) / 200 VAC (three phase)
Belt (standard) Polyurethane belt (Green color, compliant with food standards, antistatic treatment done)
Option Legs, guide, etc.

●When the machine length is 6 m or above, an intermediate take-up unit comes with the conveyor.

DRAWING

(Unit: mm)

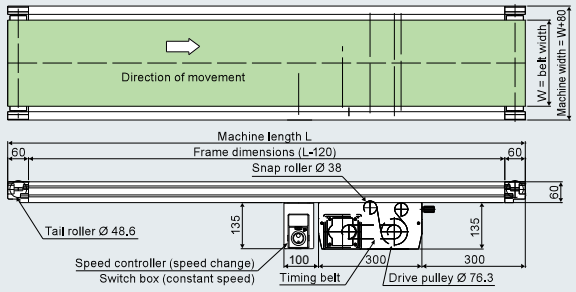

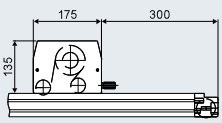

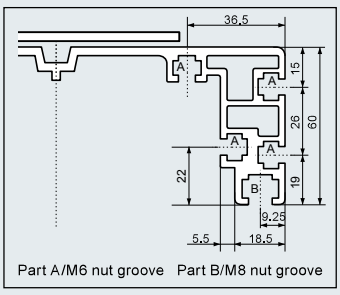

Frame cross section

DATA

Transport capacity graph (constant speed)

machine length 3,000, belt width 300

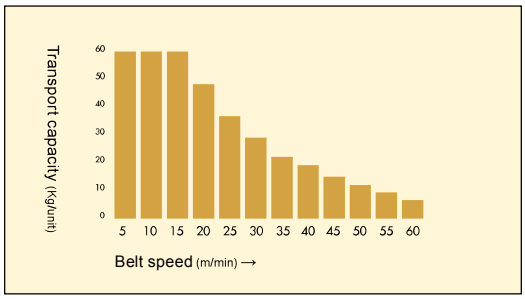

■ The graph shows the capacity when the loads are dispersed horizontally. Carry items at the setting of 40% or below.
■ The model with a belt width of 500 or 600 exhibits about 80% of the above transport capacity.
■ The transport capacity fluctuates depending on various factors.

Belt speed table

Reduction ratio	Speed symbol	Constant speed (m/min) 50/60(Hz)	Reduction ratio	Speed symbol	Speed change (m/min) 50・60(Hz)
1/180	T1	1.9/2.3	1/200	B1	0.1～3.4
1/150	T2	2.3/2.7			
1/120	T3	2.8/3.4	1/100	B2	0.2～6.8
1/100	T4	3.4/4.1			
1/90	T5	3.8/4.5			
1/75	T6	4.6/5.5			
1/60	T7	5.7/6.8	1/50	B3	0.4～13.6
1/50	T8	6.8/8.2			
1/36	T9	9.5/11.4			
1/30	T10	11.4/13.7	1/30	B4	0.6～22.7
1/25	T11	13.7/16.4			
1/18	T12	19.0/22.8			
1/15	T13	22.8/27.3	1/20	B5	1.0～34.1
1/12.5	T14	27.3/32.8			
1/9	T15	37.9/45.5	1/15	B6	1.2～45.5

■ The constant belt speed is calculated by the motor speed of 1,500/1,800 rpm (50/60 Hz), drive pulley diameter of Ø 76.3, and drive efficiency of 95%.
■ The belt speed of speed change is calculated by the motor speed of 80 rpm to 3,000 rpm (50・60 Hz), drive pulley diameter of Ø 76.3, and drive efficiency of 95%.
■ The speed change type is recommended when the speed needs to be selected accurately.
■ Speed change 120 W and speed symbols B1 to B4 are chain drive ▭. Others are timing belt drive.

Standard setting motor output table

(mm)

Machine length \ Belt width	200~300	350~800
500~4,000	Constant speed 60 W speed change 120 W	Constant speed 90 W speed change 120 W
4,001~8,000		

TYPE 60-G1 Meander-less model

60-frame

Aluminum frame | **Center drive** | **Light weight model**

The general-purpose model of the Belgotch series that uses a 60-frame with enhanced strength and have no projection to the frame side surface of the drive part.

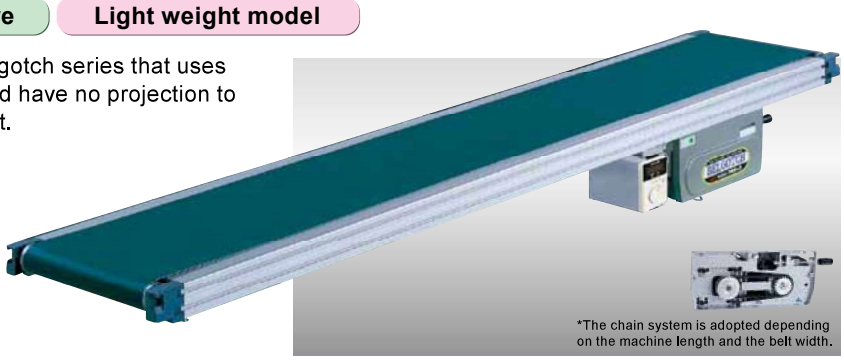

*The chain system is adopted depending on the machine length and the belt width.

*The legs are available as option. See the option page (the standard color is silver).

Standard belt (enlarged view)

SELECT How to select a model

Type60	G1	400	3,000	T5	C90
Number/ frame thickness (mm)	G: Meander-less/ model name 1: Center drive	Belt width (mm)	Machine length (mm)	Constant speed/T Speed change/B Number/ speed symbol	A (100 VAC, single phase) B (200 VAC, single phase) C (200 VAC, three phase) Number/motor output (90 W, 120 W)

The speed change model equipped with a brushless DC motor and a control unit as standard.

The maximum rotation speed of 4,000 r/min and a velocity ratio of 1:37.5 (80 to 3,000 r/min) can be set.
The motor speed is displayed on the monitor.

SIZE Standard specifications

(Unit: mm)

Belt width (actual dimension)	200	250	300	350	400	500	600	(700)	(800)
Machine width	280	330	380	430	480	580	680	(780)	(880)
Machine length	500	1,000	2,000	3,000	4,000	5,000	6,000	7,000	8,000

(The type with a belt width of 700 or 800 is a substandard item.)

Machine height	195	**Power**	100 VAC (single phase) 200 VAC (single phase) 200 VAC (three phase)
Belt speed	Constant speed Speed change	**Belt (standard)**	Polyurethane belt (Green color, compliant with food standards, antistatic treatment done)
Transport capacity	See the transport capacity graph.	**Option**	Legs, guide, etc.
Rated output	Constant speed 90 W Speed change 120 W		

●When the machine length is 6 m or above, an intermediate take-up unit comes with the conveyor.

DATA

Transport capacity graph (constant speed)

machine length 3,000, belt width 300

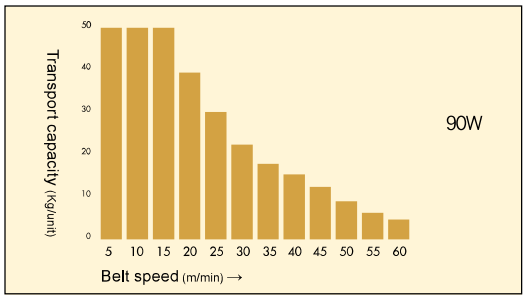

■ The graph shows the capacity when the loads are dispersed horizontally. Carry items at the setting of 40% or below.
■ The model with a belt width of 500 or 600 exhibits about 80% of the above transport capacity.
■ The transport capacity fluctuates depending on various factors.

Belt speed table

Reduction ratio	Speed symbol	Constant speed (m/min) 50/60(Hz)	Reduction ratio	Speed symbol	Speed change (m/min) 50・60(Hz)
1/180	T1	1.9/2.3	1/200	B1	0.1～3.4
1/150	T2	2.3/2.7			
1/120	T3	2.8/3.4	1/100	B2	0.2～6.8
1/100	T4	3.4/4.1			
1/90	T5	3.8/4.5			
1/75	T6	4.6/5.5			
1/60	T7	5.7/6.8	1/50	B3	0.4～13.6
1/50	T8	6.8/8.2			
1/36	T9	9.5/11.4			
1/30	T10	11.4/13.7	1/30	B4	0.6～22.7
1/25	T11	13.7/16.4			
1/18	T12	19.0/22.8			
1/15	T13	22.8/27.3	1/20	B5	1.0～34.1
1/12.5	T14	27.3/32.8			
1/9	T15	37.9/45.5	1/15	B6	1.2～45.5

■ The constant belt speed is calculated by the motor speed of 1,500/1,800 rpm (50/60 Hz), drive pulley diameter of Ø 76.3, and drive efficiency of 95%.
■ The belt speed of speed change is calculated by the motor speed of 80 rpm to 3,000 rpm (50・60 Hz), drive pulley diameter of Ø 76.3, and drive efficiency of 95%.
■ The speed change type is recommended when the speed needs to be selected accurately.
■ Speed change 120 W and speed symbols B1 to B4 are chain drive ▭. Others are timing belt drive.

Standard setting motor output table

(mm)

Machine length \ Belt width	200～800
500～8,000	Constant speed 90 W Speed change 120 W

DRAWING

(Unit: mm)

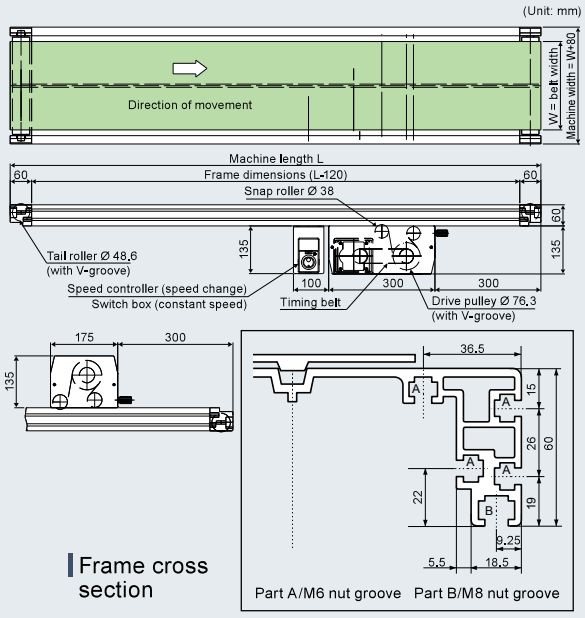

Frame cross section

TYPE 60-SZ1P,GZ1P

Standard model/ strong type model

60-frame

Aluminum frame | **Center drive** | **Light weight model**

The model is renewed by adopting a flange unit for the drive pulley axis receiving part. The strong type conveyor that allows easy maintenance because of its simple structure.
The meander-less model has a cleat for preventing meander on the back side of the belt and performs stable conveyance.

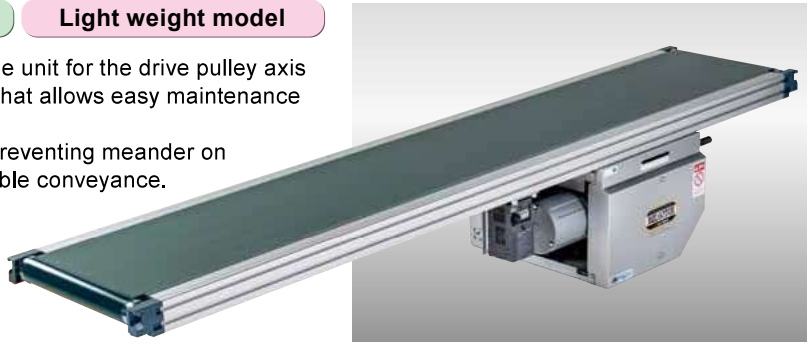

*The legs are available as option. See the option page (the standard color is silver).

Drive part side surface cover on L side

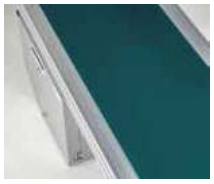

Drive part side surface cover on R side

SELECT How to select a model

Type60 - SZ1P - 300 - 3,000 - F6 - C100

Type60	SZ1P	300	3,000	F6	C100
Number/ frame thickness (mm)	SZ: Standard/ strong type/ model name GZ: Meander-less/ strong type/model name 1: Center drive	Belt width (mm)	Machine length (mm)	Speed change/F Number/ speed symbol	A (100 VAC, single phase) B (200 VAC, single phase) C (200 VAC, three phase) Number/motor output (100 W/200 W)

SIZE Standard specifications

(Unit: mm)

Belt width (actual dimension)	200	250	300	400	500	600	(700)	(800)
Machine width	280	330	380	480	580	680	(780)	(880)

Machine length	1,000	1,500	2,000	2,500	3,000	4,000	5,000	6,000	7,000	8,000

(The type with a belt width of 700 or 800 is a substandard item.)

Machine height 330
Belt speed Speed change
Transport capacity See the transport capacity graph.
Motor output 100W , 200W

Power 100 VAC (single phase)
200 VAC (single phase)
200 VAC (three phase)
Belt (standard) Polyurethane belt (Green color, compliant with food standards, antistatic treatment done)
Option Legs, guide, etc.

●When the machine length is 6 m or above, an intermediate take-up unit comes with the conveyor.

DATA

Belt speed table

Reduction ratio	Speed symbol	Constant speed (m/min) 50/60(Hz)	Motor capacity
1/200	F1	1.0～3.1	100W
1/120	F2	1.7～5.1	100W
1/100	F3	2.0～6.1	100W
1/80	F4	2.5～7.6	100W
1/50	F5	4.1～12.2	200W
1/40	F6	5.1～15.2	200W
1/30	F7	6.8～20.3	200W
1/25	F8	8.1～24.4	200W
1/20	F9	10.2～30.5	200W

■ The belt speed is calculated by the motor rated speed of 1,500/1,800 rpm (50・60 Hz), drive pulley diameter of Ø 101.6, and drive efficiency of 95%.

The speed change is done by an inverter system.

*Motors are all for three phase 200 V regardless of whether the input power is single-phase or three-phase.
*The inverter may be different from the picture.

Standard belt (enlarged view)

DRAWING

(Unit: mm)

Frame cross section

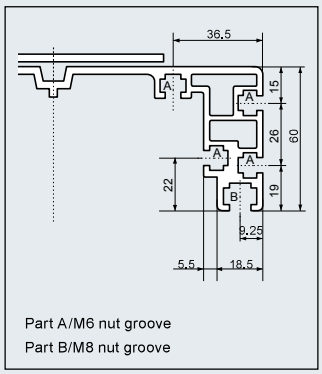

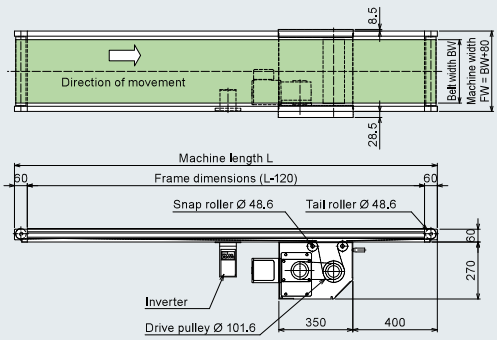

Transport capacity graph (100 W)

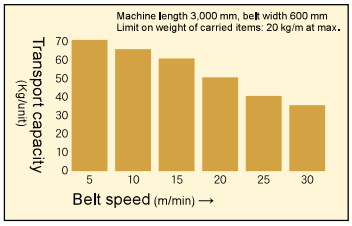

Transport capacity graph (200 W)

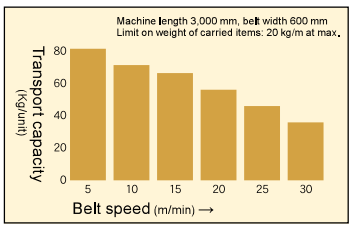

■ The graph shows the capacity when the loads are dispersed horizontally. Carry items at the setting of 40% or below.
■ The transport capacity fluctuates depending on various factors.

TYPE 60-S2 Standard model

60-frame

Aluminum frame | **Head drive** | **Light weight model**

The roller does not roll in the belt surface, and the conveyor is suitable for carrying items that get dirty easily.

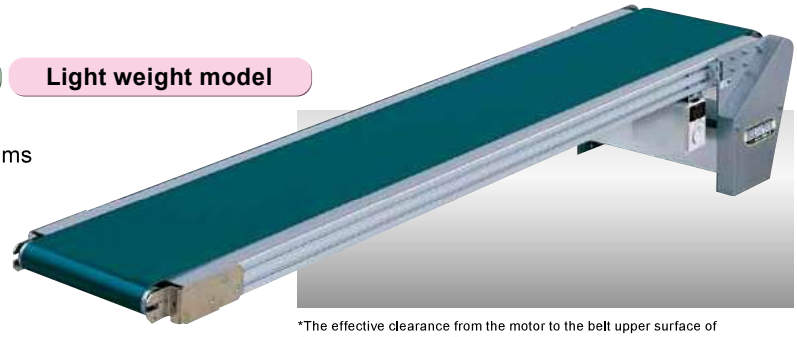

*The effective clearance from the motor to the belt upper surface of the upper part drive type is 100 mm.
*The legs are available as option. See the option page (the standard color is silver).

Standard belt (enlarged view)

Drive part position

Upper part drive type (U)

Lower part drive type (D)

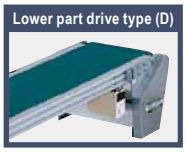

*The effective clearance from the motor to the belt upper surface of the upper part drive type is 100 mm.

The speed change model equipped with a brushless DC motor and a control unit as standard.

The maximum rotation speed of 4,000 r/min and a velocity ratio of 1:37.5 (80 to 3,000 r/min) can be set.
The motor speed is displayed on the monitor.

SELECT How to select a model

Type60 - S2D - 300 - 3,000 - T3 - C90

Type60	S2D	300	3,000	T3	C90
Number/ frame thickness (mm)	S: Standard/ model name 2: Head drive U: Upper part drive type D: Lower part drive type	Belt width (mm)	Machine length (mm)	Constant speed/T Speed change/B Number/ speed symbol	A (100 VAC, single phase) B (200 VAC, single phase) C (200 VAC, three phase) Number/motor output (90 W, 120 W)

SIZE Standard specifications

(Unit: mm)

Belt width (actual dimension)	200	250	300	400	500	600
Machine width	280	330	380	480	580	680

Machine length	1,000	1,500	2,000	2,500	3,000	3,500	4,000	5,000	6,000	7,000	8,000

Machine height 300
Belt speed Constant speed / Speed change
Transport capacity See the transport capacity graph.
Rated output Constant speed 90 W / Speed change 120 W
Power 100 VAC (single phase) / 200 VAC (single phase) / 200 VAC (three phase)
Belt (standard) Polyurethane belt (Green color, compliant with food standards, antistatic treatment done)
Option Legs, guide, etc.

●When the machine length is 6 m or above, an intermediate take-up unit comes with the conveyor.

DATA

Belt speed table

Reduction ratio	Speed symbol	Constant speed (m/min) 50/60(Hz)	Reduction ratio	Speed symbol	Speed change (m/min) 50・60(Hz)
1/180	T1	1.9/2.3	1/200	B1	0.1～3.4
1/150	T2	2.3/2.7			
1/120	T3	2.8/3.4			
1/100	T4	3.4/4.1	1/100	B2	0.2～6.8
1/90	T5	3.8/4.5			
1/75	T6	4.6/5.5			
1/60	T7	5.7/6.8			
1/50	T8	6.8/8.2	1/50	B3	0.4～13.6
1/36	T9	9.5/11.4			
1/30	T10	11.4/13.7			
1/25	T11	13.7/16.4	1/30	B4	0.6～22.7
1/18	T12	19.0/22.8			
1/15	T13	22.8/27.3	1/20	B5	1.0～34.1
1/12.5	T14	27.3/32.8			
1/9	T15	37.9/45.5	1/15	B6	1.2～45.5

■ The constant belt speed is calculated by the motor speed of 1,500/1,800 rpm (50/60 Hz), drive pulley diameter of Ø 76.3, and drive efficiency of 95%.
■ The belt speed of speed change is calculated by the motor speed of 80 rpm to 3,000 rpm (50・60 Hz), drive pulley diameter of Ø 76.3, and drive efficiency of 95%.
■ The speed change type is recommended when the speed needs to be selected accurately.

Transport capacity graph (constant speed) machine length 3,000, belt width 300

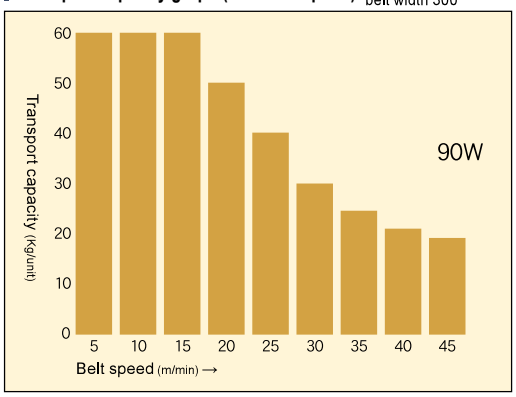

■ The graph shows the capacity when the loads are dispersed horizontally. Carry items at the setting of 40% or below.
■ The model with a belt width of 500 or 600 exhibits about 80% of the above transport capacity.
■ The transport capacity fluctuates depending on various factors.

DRAWING

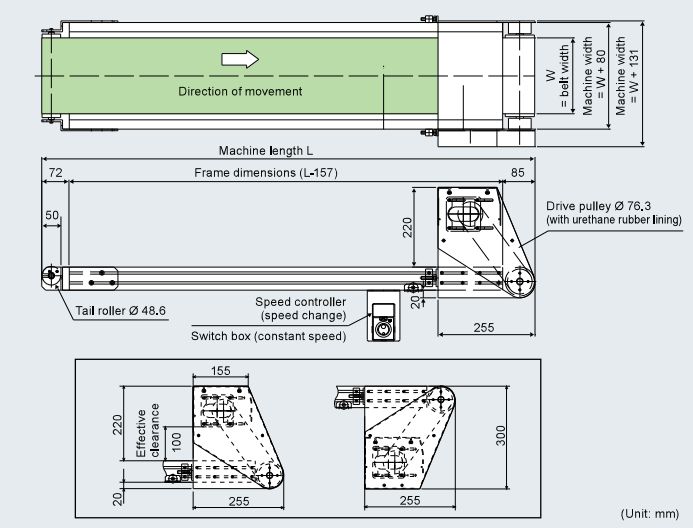

Standard setting motor output table

(mm)

Machine length \ Belt width	200～600
1,000～8,000	Constant speed 90 W, speed change 120 W

TYPE 60-G2 Meander-less model

60-frame

Aluminum frame | **Head drive** | **Light weight model**

Stable conveyance with less deviation is realized by adopting a meander-less belt.
It is suitable for places where it is difficult to perform maintenance inspection such as when the conveyor is set to other machines.

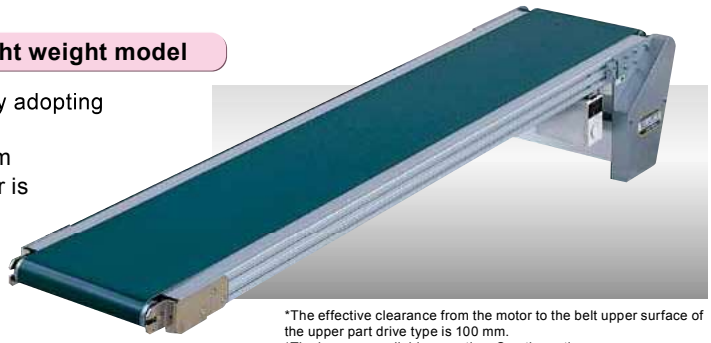

*The effective clearance from the motor to the belt upper surface of the upper part drive type is 100 mm.
*The legs are available as option. See the option page (the standard color is silver).

Standard belt (enlarged view)

Drive part position

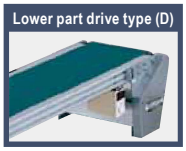

*The effective clearance from the motor to the belt upper surface of the upper part drive type is 100 mm.

The speed change model equipped with a brushless DC motor and a control unit as standard.

The maximum rotation speed of 4,000 r/min and a velocity ratio of 1:37.5 (80 to 3,000 r/min) can be set.
The motor speed is displayed on the monitor.

SELECT How to select a model

Type60 - G2D - 300 - 3,000 - T5 - C90

Type60	G2D	300	3,000	T5	C90
Number/ frame thickness (mm)	G: Meander-less/ model name 2: Head drive U: Upper part drive type D: Lower part drive type	Belt width (mm)	Machine length (mm)	Constant speed/T Speed change/B Number/ speed symbol	A (100 VAC, single phase) B (200 VAC, single phase) C (200 VAC, three phase) Number/motor output (90 W, 120 W)

SIZE Standard specifications

(Unit: mm)

Belt width (actual dimension)	200		250		300		400		500		600	
Machine length	1,000	1,500	2,000	2,500	3,000	3,500	4,000	5,000	6,000	7,000	8,000	

Machine height	300
Belt speed	Constant speed Speed change
Transport capacity	See the transport capacity graph.
Rated output	Constant speed 90 W Speed change 120 W
Power	100 VAC (single phase) 200 VAC (single phase) 200 VAC (three phase)
Belt (standard)	Polyurethane belt (Green color, compliant with food standards, antistatic treatment done)
Option	Legs, guide, etc.

●When the machine length is 6 m or above, an intermediate take-up unit comes with the conveyor.

DATA

Belt speed table

Reduction ratio	Speed symbol	Constant speed (m/min) 50/60(Hz)	Reduction ratio	Speed symbol	Speed change (m/min) 50・60(Hz)
1/180	T1	1.9/2.3	1/200	B1	0.1～3.4
1/150	T2	2.3/2.7			
1/120	T3	2.8/3.4			
1/100	T4	3.4/4.1	1/100	B2	0.2～6.8
1/90	T5	3.8/4.5			
1/75	T6	4.6/5.5			
1/60	T7	5.7/6.8			
1/50	T8	6.8/8.2	1/50	B3	0.4～13.6
1/36	T9	9.5/11.4			
1/30	T10	11.4/13.7			
1/25	T11	13.7/16.4	1/30	B4	0.6～22.7
1/18	T12	19.0/22.8			
1/15	T13	22.8/27.3	1/20	B5	1.0～34.1
1/12.5	T14	27.3/32.8			
1/9	T15	37.9/45.5	1/15	B6	1.2～45.5

■ The constant belt speed is calculated by the motor speed of 1,500/1,800 rpm (50/60 Hz), drive pulley diameter of Ø 76.3, and drive efficiency of 95%.
■ The belt speed of speed change is calculated by the motor speed of 80 rpm to 3,000 rpm (50・60 Hz), drive pulley diameter of Ø 76.3, and drive efficiency of 95%.
■ The speed change type is recommended when the speed needs to be selected accurately.

Transport capacity graph (constant speed) machine length 3,000, belt width 300

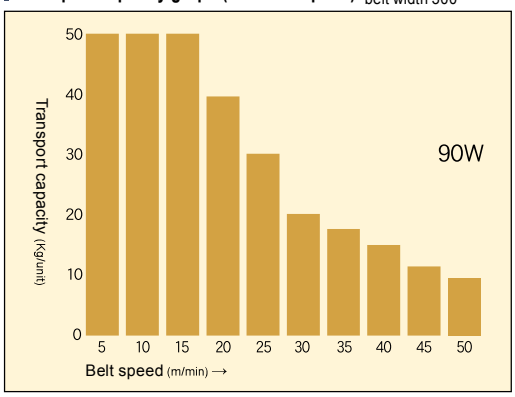

■ The graph shows the capacity when the loads are dispersed horizontally. Carry items at the setting of 40% or below.
■ The model with a belt width of 500 or 600 exhibits about 80% of the above transport capacity.
■ The transport capacity fluctuates depending on various factors.

Standard setting motor output table

(mm)

Machine length \ Belt width	200～600
1,000～8,000	Constant speed 90 W, speed change 120 W

DRAWING

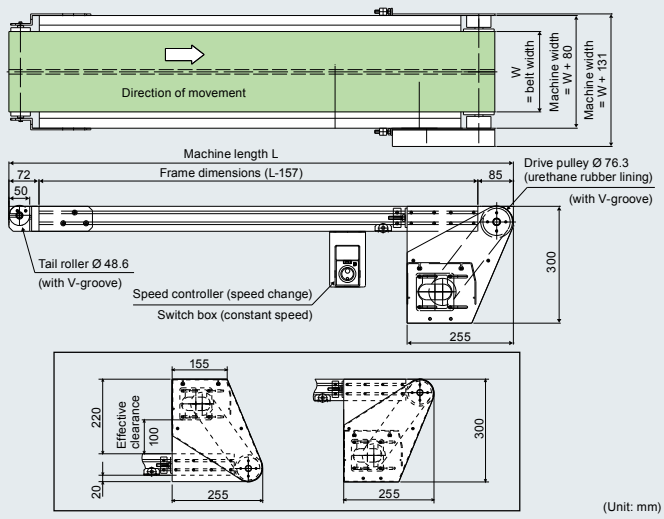

(Unit: mm)

TYPE 90-S1 Standard model

90-frame

Aluminum frame **Center drive** **Medium weight model**

The carrier table system, which realizes stable conveyance of unstable heavy things, is adopted.

Standard belt (enlarged view)

*The legs are available as option.
See the option page (the standard color is silver).

SELECT How to select a model

Type90	S1	1,000	3,000	T6	C200
Number/ frame thickness (mm)	S: Standard/ model name 1: Center drive	Belt width (mm)	Machine length (mm)	Constant speed/T Speed change/F Number/ speed symbol	A (100 VAC, single phase) B (200 VAC, single phase) C (200 VAC, three phase) Number/motor output (100 W/200 W/400 W)

SIZE Standard specifications

(Unit: mm)

Belt width (actual dimension)	300	400	500	600	700	800	900	1,000	1,100	1,200
Machine width	400	500	600	700	800	900	1,000	1,100	1,200	1,300
Machine length	1,000	2,000	3,000	4,000	5,000	6,000	7,000	8,000	9,000	10,000

Machine height 390
Belt speed Constant speed
Speed change
Transport capacity See the transport capacity graph.
Motor output 100W, 200W, 400W
Power 100 VAC (single phase)
200 VAC (single phase)
200 VAC (three phase)
Belt (standard) Polyurethane belt(2-ply) (Green color, compliant with food standards, antistatic treatment done)
Option Legs, guide, etc.

●When the machine length is 6 m or above, an intermediate take-up unit comes with the conveyor.

DRAWING

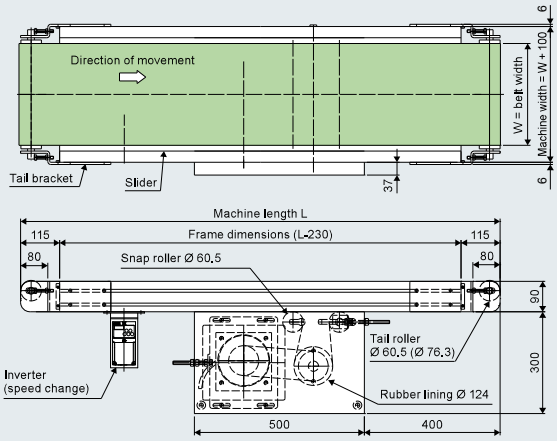

Frame cross section

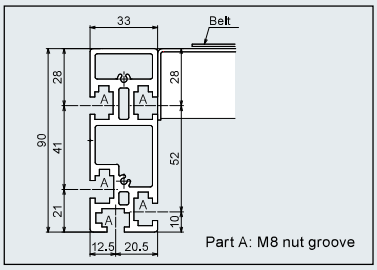

*Tail roller diameter
300～600W Ø60.5
700～1,000W Ø76.3
*The two-point switch is available as option in the case of constant speed.

(Unit: mm)

DATA

Belt speed table

Reduction ratio	Speed symbol	Constant speed (m/min) 50/60(Hz)	Speed symbol	Speed change (m/min) 50・60(Hz)
1/450	T1	1.1/1.3	F1	0.4～1.3
1/375	T2	1.3/1.6	F2	0.5～1.6
1/300	T3	1.7/2.0	F3	0.7～2.0
1/200	T4	2.5/3.0	F4	1.0～3.0
1/160	T5	3.1/3.8	F5	1.3～3.8
1/120	T6	4.2/5.0	F6	1.7～5.0
1/100	T7	5.0/6.0	F7	2.0～6.0
1/80	T8	6.3/7.5	F8	2.5～7.5
1/60	T9	8.4/10.0	F9	3.4～10.0
1/50	T10	10.0/12.1	F10	4.0～12.1
1/40	T11	12.6/15.1	F11	5.0～15.1
1/30	T12	16.7/20.1	F12	6.7～20.1
1/25	T13	20.1/24.1	F13	8.0～24.1
1/20	T14	25.1/30.1	F14	10.0～30.1

■ The belt speed is calculated by the motor speed of 1,500/1,800 rpm (50/60 Hz), drive pulley diameter of Ø 124, and drive efficiency of 95%.
■ The speed change type is recommended when the speed needs to be selected accurately.

The speed change is done by an inverter system.

*Motors are all for three phase 200 V regardless of whether the input power is single-phase or three-phase.
*The inverter may be different from the picture.

Motor selection chart

Motor output	Reduction ratio
100W	1/15～1/450
200W	1/15～1/200
400W	1/15～1/100

*Setting besides the above is not available.

Transport capacity graph (constant speed)

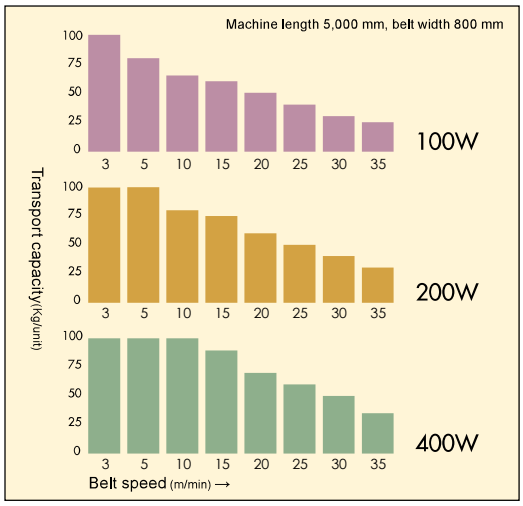

■ The graph shows the capacity when the loads are dispersed horizontally. Carry items at the setting of 40% or below.
■ The transport capacity fluctuates depending on various factors.
■ For the belt width of 1,100 W and 1,200 W, the transport weight must be set to 80% or below.

TYPE 90-G1 Meander-less model

90-frame

Aluminum frame **Center drive** **Medium weight model**

The carrier table system, which realizes stable conveyance of unstable heavy things, is adopted.

Standard belt (enlarged view)

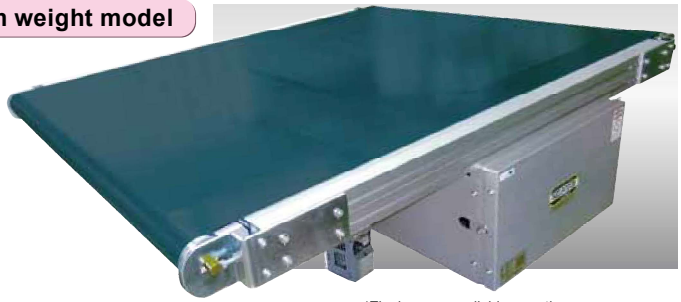

*The legs are available as option.
See the option page (the standard color is silver).

SELECT How to select a model

Type90	G1	1,000	3,000	T6	C200
Number/ frame thickness (mm)	G: Meander-less/ model name 1: Center drive	Belt width (mm)	Machine length (mm)	Constant speed/T Speed change/F Number/ speed symbol	A (100 VAC, single phase) B (200 VAC, single phase) C (200 VAC, three phase) Number/motor output (100 W/200 W/400 W)

SIZE Standard specifications

(Unit: mm)

Belt width (actual dimension)	300	400	500	600	700	800	900	1,000	1,100	1,200
Machine width	400	500	600	700	800	900	1,000	1,100	1,200	1,300
Machine length	1,000	2,000	3,000	4,000	5,000	6,000	7,000	8,000		

Machine height 390
Belt speed Constant speed
Speed change
Transport capacity See the transport capacity graph.
Motor output 100W, 200W, 400W
Power 100 VAC (single phase)
200 VAC (single phase)
200 VAC (three phase)
Belt (standard) Polyurethane belt(2-ply) (Green color, compliant with food standards, antistatic treatment done)
Option Legs, guide, etc.

●When the machine length is 6 m or above, an intermediate take-up unit comes with the conveyor.

DRAWING

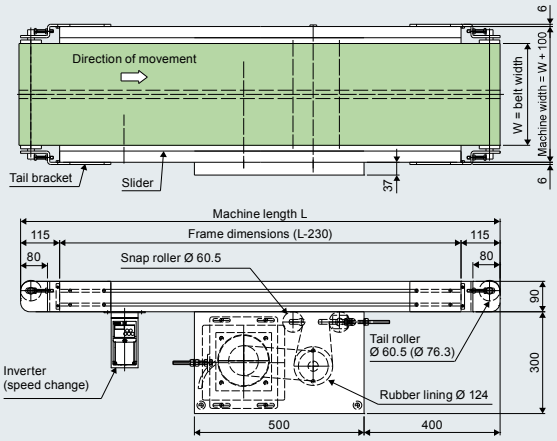

Frame cross section

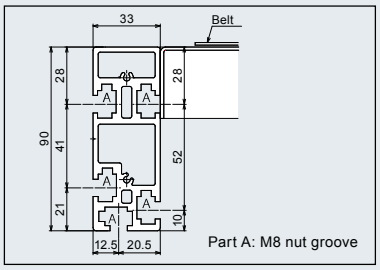

*Tail roller diameter
300～600W Ø60.5
700～1,000W Ø76.3
*The two-point switch is available as option in the case of constant speed.

(Unit: mm)

DATA

Belt speed table

Reduction ratio	Speed symbol	Constant speed (m/min) 50/60(Hz)	Speed symbol	Speed change (m/min) 50・60(Hz)
1/450	T1	1.1/1.3	F1	0.4～1.3
1/375	T2	1.3/1.6	F2	0.5～1.6
1/300	T3	1.7/2.0	F3	0.7～2.0
1/200	T4	2.5/3.0	F4	1.0～3.0
1/160	T5	3.1/3.8	F5	1.3～3.8
1/120	T6	4.2/5.0	F6	1.7～5.0
1/100	T7	5.0/6.0	F7	2.0～6.0
1/80	T8	6.3/7.5	F8	2.5～7.5
1/60	T9	8.4/10.0	F9	3.4～10.0
1/50	T10	10.0/12.1	F10	4.0～12.1
1/40	T11	12.6/15.1	F11	5.0～15.1
1/30	T12	16.7/20.1	F12	6.7～20.1
1/25	T13	20.1/24.1	F13	8.0～24.1
1/20	T14	25.1/30.1	F14	10.0～30.1

■ The belt speed is calculated by the motor speed of 1,500/1,800 rpm (50/60 Hz), drive pulley diameter of Ø 124, and drive efficiency of 95%.
■ The speed change type is recommended when the speed needs to be selected accurately.

The speed change is done by an inverter system.

*Motors are all for three phase 200 V regardless of whether the input power is single-phase or three-phase.
*The inverter may be different from the picture.

Motor selection chart

Motor output	Reduction ratio
100W	1/15～1/450
200W	1/15～1/200
400W	1/15～1/100

*Setting besides the above is not available.

Transport capacity graph (constant speed)

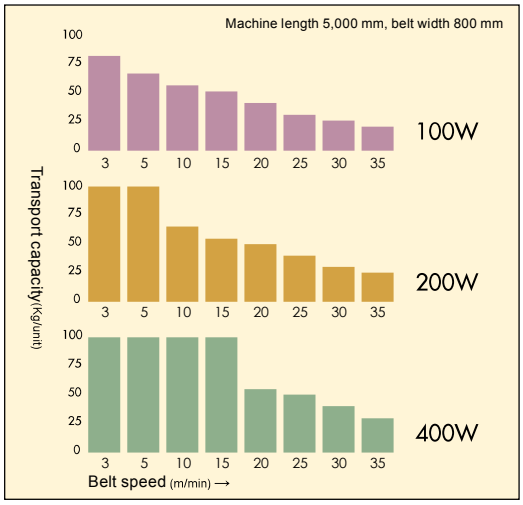

■ The graph shows the capacity when the loads are dispersed horizontally. Carry items at the setting of 40% or below.
■ The transport capacity fluctuates depending on various factors.
■ For the belt width of 1,100 W and 1,200 W, the transport weight must be set to 80% or below.

TYPE 90-S2 Standard model

90-frame

Aluminum frame | Head drive | Medium weight model

A model of the head drive S2 series for carrying heavy things.
A motor up to 400 W can be selected.

*The legs are available as option.
See the option page
(the standard color is silver).

SELECT How to select a model

Type90	S2D	300	2,000	T3	C100
Number/ frame thickness (mm)	S: Standard 2: Head drive D: Lower part drive type	Belt width (mm)	Machine length (mm)	Constant speed/T Speed change/F Number/ speed symbol	A (100 VAC, single phase) B (200 VAC, single phase) C (200 VAC, three phase) *Inverter speed change

SIZE Standard specifications

(Unit: mm)

Belt width (actual dimension)	300	400	500	600	700	800
Machine width	400	500	600	700	800	900
Machine length	1,000～8,000					

Machine height 380
Belt speed Constant speed / Speed change
Transport capacity See the transport capacity graph.
Motor output 100W, 200W, 400W
Power 100 VAC (single phase) / 200 VAC (single phase) / 200 VAC (three phase)
Belt (standard) Polyurethane belt(2-ply) (Green color, compliant with food standards, antistatic treatment done)
Option Legs, guide, etc.

●When the machine length is 6 m or above, an intermediate take-up unit comes with the conveyor.

DRAWING

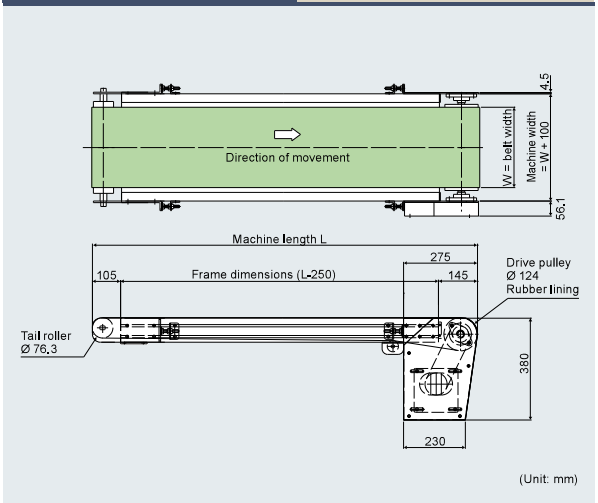

DATA

Belt speed table

Reduction ratio	Speed symbol	Constant speed (m/min) 50/60(Hz)	Speed symbol	Speed change (m/min) 50・60(Hz)
1/450	T1	1.1/1.3	F1	0.4～1.3
1/375	T2	1.3/1.6	F2	0.5～1.6
1/300	T3	1.7/2.0	F3	0.7～2.0
1/200	T4	2.5/3.0	F4	1.0～3.0
1/160	T5	3.1/3.8	F5	1.3～3.8
1/120	T6	4.2/5.0	F6	1.7～5.0
1/100	T7	5.0/6.0	F7	2.0～6.0
1/80	T8	6.3/7.5	F8	2.5～7.5
1/60	T9	8.4/10.0	F9	3.4～10.0
1/50	T10	10.0/12.1	F10	4.0～12.1
1/40	T11	12.6/15.1	F11	5.0～15.1
1/30	T12	16.7/20.1	F12	6.7～20.1
1/25	T13	20.1/24.1	F13	8.0～24.1
1/20	T14	25.1/30.1	F14	10.0～30.1

■ The belt speed is calculated by the motor speed of 1,500/1,800 rpm (50/60 Hz), drive pulley diameter of Φ 124, and drive efficiency of 95%.
■ The speed change type is recommended when the speed needs to be selected accurately.

Motor selection chart

(mm)

Motor output	Reduction ratio
100W	1/15～1/450
200W	1/15～1/200
400W	1/15～1/100

*Setting besides the above is not available.

Transport capacity graph (constant speed)

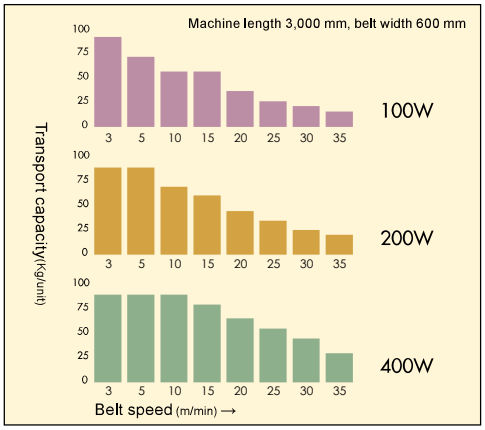

■ The graph shows the capacity when the loads are dispersed horizontally.
Carry items at the setting of 40% or below.
■ The transport capacity fluctuates depending on various factors.

TYPE 60-ZD2 Slope belt cleat model

60-frame

Aluminum frame | **Head drive** | **Light weight model**

The slope belt cleat model that allows inclined conveyance
(with a cleat height of 30 H and a cleat pitch of about 300 P).
It supports an inclination angle of up to 45°.

*The cover hopper is available as option.

Standard belt (enlarged view)

SELECT How to select a model

Type60	ZD2	300	3,700	T1	C200	2,500
Number/ frame thickness (mm)	ZD2: For steep slope	Belt width (mm)	Horizontal machine length (mm) *Horizontal machine length: 2,000 to 5,000 (mm)	Constant speed/T Speed change/F Number/ speed symbol	A (100 VAC, single phase) B (200 VAC, single phase) C (200 VAC, three phase) Constant speed = C only Speed change = A, B, C	Lifting height

SIZE Standard specifications

(Unit: mm)

Belt width	300	400	500	600
Effective belt width	200	300	400	500
Machine width	380	480	580	680
Lifting height	2,500			

Machine height 300H (h1)
Belt speed Constant speed
Speed change
Transport capacity See the transport capacity table.
Motor output 200W
Power Constant speed
200 VAC (three phase)
Speed change
100 VAC (single phase)
200 VAC (single phase)
200 VAC (three phase)
Belt (standard) Polyurethane belt with cleat for preventing meander (color: green)
Option Legs

DATA

Conveyor speed table

Reduction ratio	Speed symbol	Constant speed (m/min) 50/60(Hz)	Speed symbol	Speed change (m/min) 50・60(Hz)
1/75	T1	5.3/6.4	F1	2.1～6.4
1/50	T2	8.1/9.6	F2	3.2～9.6
1/30	T3	13.4/16.1	F3	5.3～16.1
1/18	T4	22.3/26.8	F4	8.9～26.8

Transport capacity table

Lifting height (mm)	Inclination angle	Motor output	Speed symbol	Transport capacity (kg)
460～3,800	30° 45°	200W	1	30
			2	25
			3	20
			4	12

*Powder and pellet items cannot be carried.

DRAWING

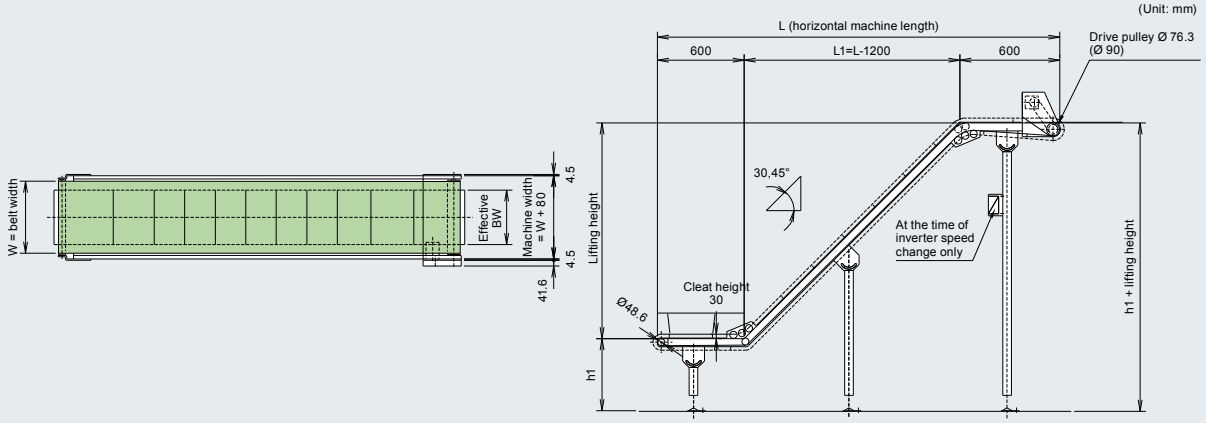

TYPE 120-ZD2S Slope belt cleat model

120-frame

Aluminum frame | **Head drive** | **Medium weight model**

The slope belt cleat model that allows inclined conveyance
It supports an inclination angle of up to 60°.

*The cover hopper is available as option.

Standard belt (enlarged view)

SELECT How to select a model

Type120	ZD2S	400	3,900	T	C400	2,500
Number/ frame thickness (mm)	ZD2: For steep slope S: Corrugated cleat	Belt width (mm)	Horizontal machine length (mm) *Horizontal machine length: 2,500 to 5,000 (mm)	Constant speed/T Speed change/F Number/ speed symbol	A (100 VAC, single phase) B (200 VAC, single phase) C (200 VAC, three phase) Constant speed = C only Speed change = A, B, C	Lifting height

SIZE Standard specifications

(Unit: mm)

Belt width	400	500	600
Effective belt width	170	270	370
Machine width	480	580	680
Lifting height	2,500		

Machine height | 300H (h1)
Belt speed | Constant speed
Speed change
Transport capacity | See the transport capacity table.
Motor output | 400W

Power | Constant speed
200 VAC (three phase)
Speed change
100 VAC (single phase)
200 VAC (single phase)
200 VAC (three phase)
Belt (standard) | Polyurethane belt with cleat for preventing meander (color: green)
Option | Legs

DATA

Conveyor speed table

Reduction ratio	Speed symbol	Constant speed (m/min) 50/60(Hz)	Speed symbol	Speed change (m/min) 50・60(Hz)
1/100	T1	4.6/5.5	F1	1.8～5.5
1/60	T2	7.6/9.1	F2	3.1～9.1
1/40	T3	11.4/13.7	F3	4.6～13.7
1/25	T4	18.3/21.9	F4	7.3～21.9

Transport capacity table

Lifting height (mm)	Inclination angle	Motor output	Speed symbol	Transport capacity (kg)
630～6,240	30°	400W	1	48
	45°		2	40
	60°		3	32
			4	20

*Powder and pellet items cannot be carried.

DRAWING

(Unit: mm)

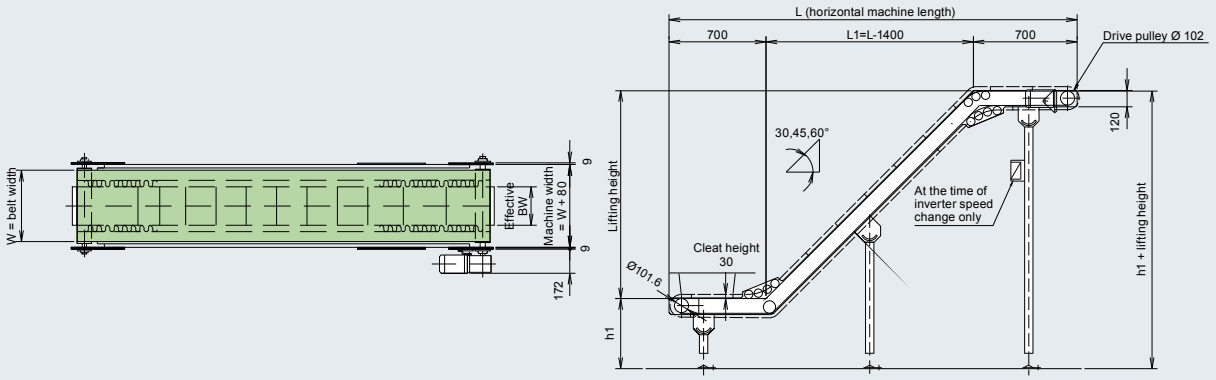

Option 1 Belt

Belt types	Standard belt				Slope belt			Super antistatic belt		Slip belt			
No.	1	2	3	4	5	6	7	8	9	10	11	12	13
Color	Green	White	Green	White	Green	Green	Green	Black	Black	Green	White	Green	White
Number of ply	1	1	2	2	1	2	2	1	2	1	1	2	2
Surface material	Polyurethane	Polyurethane	Polyurethane	Polyurethane	Polyurethane	Polyurethane	Vinyl chloride	Polyurethane	Polyurethane	Polyurethane	Polyurethane	Polyurethane	Polyurethane
Belt thickness (mm)	0.8 1.2	0.9	1.3	1.4	1.8	2.3	4.1	0.9	1.45	0.8	0.9	1.2	1.25
Minimum pulley diameter	3R to 8R knife edge	3R to 8R knife edge	25	3R to 8R knife edge	25	40	60	3R to 8R knife edge	25	20	3R to 8R knife edge	20	3R to 8R knife edge
Operating temperature range	-30 ~ +100	-30 ~ +100	-30 ~ +100	-30 ~ +100	-30 ~ +100	-30 ~ +100	-10 ~ +70	-30 ~ +100	-30 ~ +100	-30 ~ +100	-30 ~ +100	-30 ~ +100	-30 ~ +100
Antistatic treatment	○	○	○	○	○	○	○	◎	◎	○	○	○	○
Suitability for food	○	○	○	○	Raw food conveyance not allowed	Raw food conveyance not allowed	×	Raw food conveyance not allowed	Raw food conveyance not allowed	○	○	○	○
Note	Low noise	Low noise	Resistance to moist heat	Compliant with FDA and BGA	Vertical grooves	Vertical grooves	Rough surface				Compliant with FDA and BGA		Compliant with FDA and BGA
Compatible models	Types 34, 40, 60, and 90.	Types 34, 40, 60, and 90.	Types 34, 60, and 90. KI, KII, RI, RII, VI, and VII are excluded.	Types 60 and 90. KI, KII, RI, RII, VI, and VII are excluded.	Types 34, 40, 60, and 90. KI, KII, RI, RII, VI, and VII are excluded.	Types 60 and 90. KI, KII, RI, RII, VI, and VII are excluded.	Types 90. RI is excluded.	Types 34, 40, 60, and 90. KI, KII, RI, RII, VI, and VII are excluded.	Types 60 and 90. KI, KII, RI, RII, VI, and VII are excluded.	Types 34, 40, 60, and 90. KI, KII, RI, RII, VI, and VII are excluded.	Types 34, 40, 60, and 90. VI and VII are excluded.	Types 60 and 90. KI, KII, RI, RII, VI, and VII are excluded.	Types 60 and 90. KI, KII, RI, RII, VI, and VII are excluded.

5.6 Slope belt (vertical grooves)

Able to perform inclined conveyance up to an inclination angle of 25° by the special vertical grooves on the surface.

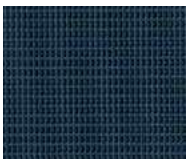

7 Slope belt (rough top)

For inclined conveyance. Compatible with conveyors with a minimum pulley diameter of Ø 60 or more.

8.9 Super antistatic belt

For carrying charged items such as electronic parts (surface electric resistance value 1 × 10^5 Ω or below)

10.12 Slip belt

For arranging carried items and sorting piled up items.

14 Drought heat resistant belt

For carrying high-temperature items on a dry line (compliant with Food Sanitation Standards).

15 Moist heat resistant belt

For carrying items with moist and heat such as fish pudding products (compliant with Food Sanitation Standards).

25.26 Cut resistant belt

A belt with a scratch resistant surface (for carrying pressed parts).

27 1-Ply belt (white)

High grip performance.

28 1-Ply belt (green)

For inclined conveyance.

29 Belt for skirt

Belt for standard skirt guide.

Belgotch options

Drought resistant/ moist heat resistant belt		Oil resistant belt (machine oil)	Oil resistant belt (Food oil)	Antibacterial/antifungal belt			Non-adhesive belt		Suede belt (soft)		Cut resistant belt		Others		
14	15	16	17	18	19	20	21	22	23	24	25	26	27	28	29
Black	Gray	Gray	White	White	White	White	White	White	Green	Green	Ivory		White	Green	Green
1	1	1	1	1	1	2	1	2	1	2	1	1	1	1	1
Elastomer	Polyurethane	Polyurethane	Polyurethane	Polyurethane	Polyurethane	Polyurethane	Silicon	Silicon	Suede	Suede	Vectran	Vectran	Polyurethane	Special rubber	Polyurethane
1.2	0.7	0.7	1.15	0.7	0.8	1.4	1.1	1.5	1.8	2.0	1.2	1.5	1.5	2.0	0.6
25 *1	3R to 8R knife edge	3R to 8R knife edge	3R to 8R knife edge	15	15	20	3R to 8R knife edge	40	25 *2	30	25	40	25	20	25
-10 ∫ +120	-30 ∫ +100	-30 ∫ +100	-30 ∫ +100	-30 ∫ +80	-20 ∫ +80	-20 ∫ +80	-30 ∫ +100	-40 ∫ +180	-5 ∫ +60	-5 ∫ +60	0 ∫ +80	-10 ∫ +80	0 ∫ +70	-5 ∫ +60	-30 ∫ +100
◎	×	×	○	○	○	○	○	○	○	○	×	×	○	○	○
Raw food conveyance not allowed	○	○	○	○	○	○	○	○	×	×	×	×	○	×	○
					Low profile canvas with selvage fray prevention		High grip performance		Unlikely to damage quality <soft>		Scratch resistant belt surface		High grip performance	For inclined conveyance	Applied to troughed conveyor and skirt belt
Types 34, 40, and 60. KI, KII, RI, RII, VI, and VII are excluded. *1	Types 34, 40, 60, and 90. VI and VII are excluded.	Types 34, 40, 60, and 90. VI and VII are excluded.	Types 34, 40, 60, and 90. VI and VII are excluded.	Types 34, 40, and 60. KI, KII, RI, RII, VI, and VII are excluded.	Types 60 and 90. KI, KII, RI, RII, VI, and VII are excluded.	Types 60 and 90. KI, KII, VI, and VII are excluded.	Types 34, 40, 60, and 90. VI and VII are excluded.	Types 60 and 90. KI, KII, RI, RII, VI, and VII are excluded.	TTypes 34, 40, 60, and 90. KI, KII, RI, RII, VI, and VII are excluded. *2	Types 60 and 90. KI, KII, RI, RII, VI, and VII are excluded.	TTypes 34, 40, 60, and 90. KI, KII, RI, RII, VI, and VII are excluded. *2	Types 60 and 90. KI, KII, RI, RII, VI, and VII are excluded.	Types 34, 40, and 60. KI, KII, RI, RII, VI, and VII are excluded.	Types 34, 40, and 60. KI, KII, RI, RII, VI, and VII are excluded.	Types 34, 40, and 60. RI, RII, VI, and VII are excluded.

16 Oil resistant belt (for machine oil)
For metalworking lines where oil adheres.

17 Oil resistant belt (for cooking oil)
When a small amount of oil adheres to the belt.

18 Antibacterial/ antifungal belt
Belt for food.

19.20 Antibacterial/ antifungal belt
Selvage fray prevention (for food).

21.22 Non-adhesive belt
For carrying adhesive products.

23.24 Suede skirt
Unlikely to damage products.

*1. A lining will be necessary for the drive pulley when No. 14 is used.
*2. When belt 23 or 25 is to be used for type 34, the motor capacity constant speed should be 90 W and the speed change should be 120 W.
*The operating temperature is the heat resistant temperature of the belt and not the operating environment of the conveyor.
*The optional belts may be affected by temperature or chemicals or oils depending on their type. Please check them before use.
*The color of the belt may look different from the catalog because of the way it is printed.
*The above belt specifications may be changed without notice for quality improvement.

Option 2 Legs [for types 12, 34, and 40, ModeL34-frame]

[Tip legs]

KAD (aluminum)

Model	Leg height (mm)
KAD	135

Model example

KAD

Tip leg (standard color: silver)
*Two pieces are included in one set.

DRAWING

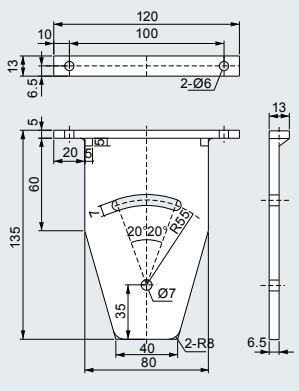

KSD (steel)

Model	Leg height (mm)
KSD	135

Model example

KSD

Tip leg
*Two pieces are included in one set.

DRAWING

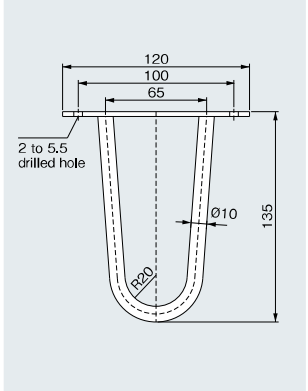

[Standard steel leg]

Applied to models with a belt width of 50 mm to 300 mm.

SELECT

Model	Leg height (mm)
KSX-1	320～420
KSX-2	370～520
KSX-3	470～720
KSX-4	620～1020
KSX-5	770～1,270

■ When ordering legs, please tell us the type and model name of the conveyor.
■ The attachment angle of the legs can be adjusted up to 20° with respect to a horizontal surface.
(Standard color: silver)

Model example

KSX - 2 - 300

KSX	2	300	
Standard leg (steel)	Leg height (370 to 520)	Belt width (mm)	Rubber adjuster leg

DRAWING

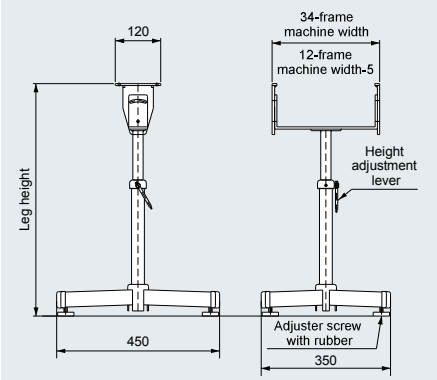

[Steel auxiliary leg]

Applied to models with a belt width of 50 mm to 300 mm.

SELECT

Model	Leg height (mm)
KSI-1	320～420
KSI-2	370～520
KSI-3	470～720
KSI-4	620～1020
KSI-5	770～1,270

■ When ordering legs, please tell us the type and model name of the conveyor.
■ The attachment angle of the legs can be adjusted up to 20° with respect to a horizontal surface.
(Standard color: silver)

Model example

KSI - 2 - 300

KSI	2	300	
Auxiliary leg (steel)	Leg height (370 to 520)	Belt width (mm)	Rubber adjuster leg

DRAWING

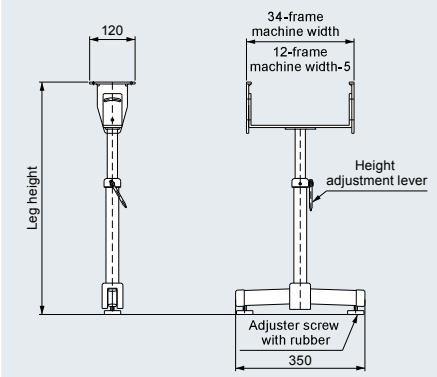

Option 3 Legs [for types 34 and 40, ModeL34-frame]

[Steel fixed leg]

Applied to models with a belt width of 200 mm or above.

SELECT

Model	Leg height (mm)	Model	Leg height (mm)
34CSH4	350~450	34CSH9.5	900~1,000
34CSH4.5	400~500	34CSH10	950~1,050
34CSH5	450~550	34CSH10.5	1,000~1,100
34CSH5.5	500~600	34CSH11	1,050~1,150
34CSH6	550~650	34CSH11.5	1,100~1,200
34CSH6.5	600~700	34CSH12	1,150~1,250
34CSH7	650~750	34CSH12.5	1,200~1,300
34CSH7.5	700~800	34CSH13	1,250~1,350
34CSH8	750~850	34CSH13.5	1,300~1,400
34CSH8.5	800~900	34CSH14	1,350~1,450
34CSH9	850~950	34CSH15	1,450~1,550

■ For a leg height of 500 mm or below, the number of stay will be one.
■ The attachment angle of the legs can be adjusted up to 20° with respect to a horizontal surface.
■ Tell us the presence of the reinforcement pipe.
(Standard color: silver)

Model example

34CSH - 7 - 300

- 34CSH: Fixed leg (stainless) 34CSH 34-frame 40CSH 40-frame
- 7: Leg height (650 to 750)
- 300: Belt width (mm)
- Adjustment bolt with anchor (optional)

DRAWING

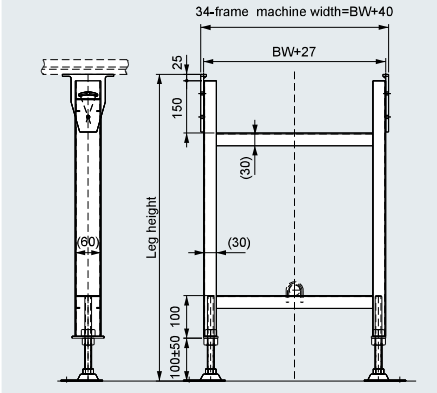

[Steel fixed leg (splayed tapered shape)]

Applied to models with a belt width below 200 mm.

SELECT

Model	Leg height (mm)	Model	Leg height (mm)
CST4	350~450	CST9.5	900~1,000
CST4.5	400~500	CST10	950~1,050
CST5	450~550	CST10.5	1,000~1,100
CST5.5	500~600	CST11	1,050~1,150
CST6	550~650	CST11.5	1,100~1,200
CST6.5	600~700	CST12	1,150~1,250
CST7	650~750	CST12.5	1,200~1,300
CST7.5	700~800	CST13	1,250~1,350
CST8	750~850	CST13.5	1,300~1,400
CST8.5	800~900	CST14	1,350~1,450
CST9	850~950	CST15	1,450~1,550

■ The attachment angle of the legs can be adjusted up to 20° with respect to a horizontal surface.
■ Tell us the presence of the reinforcement pipe.
(Standard color: silver)

Model example

CST - 6 - 150

- CST: Fixed leg (steel)
- 6: Leg height (550 to 650)
- 150: Belt width (mm)
- Adjustment bolt with anchor (optional)

DRAWING

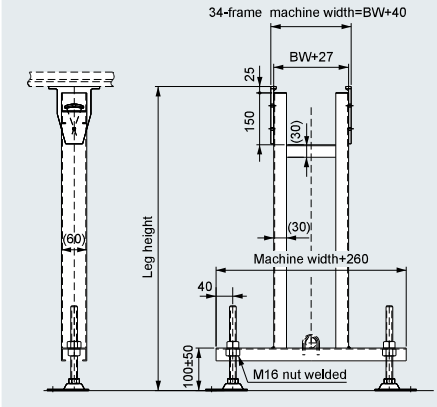

[Aluminum fixed leg]

Applied to models with a belt width of 200 mm or above.

SELECT

Model	Leg height (mm)	Model	Leg height (mm)
KAH3.5	300~400	KAH9	850~950
KAH4	350~450	KAH9.5	900~1,000
KAH4.5	400~500	KAH10	950~1,050
KAH5	450~550	KAH10.5	1,000~1,100
KAH5.5	500~600	KAH11	1,050~1,150
KAH6	550~650	KAH11.5	1,100~1,200
KAH6.5	600~700	KAH12	1,150~1,250
KAH7	650~750	KAH12.5	1,200~1,300
KAH7.5	700~800	KAH13	1,250~1,350
KAH8	750~850	KAH13.5	1,300~1,400
KAH8.5	800~900	KAH14	1,350~1,450

■ For a leg height of 500 mm or below, the number of stay will be one.
■ The attachment angle of the legs can be adjusted up to 20° with respect to a horizontal surface.
■ Tell us the presence of the reinforcement pipe.

Model example

KAH - 4 - 300

- KAH: Fixed leg (aluminum)
- 4: Leg height (350 to 450)
- 300: Belt width (mm)
- Adjustment bolt with anchor (optional)

DRAWING

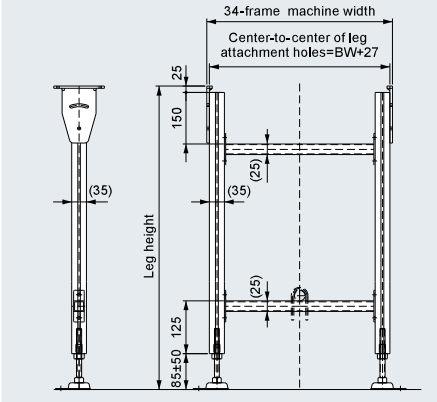

Option 4 Legs [for types 34 and 40, ModeL34-frame]

[Aluminum fixed leg (splayed tapered shape)]

Applied to models with a belt width below 200 mm.

SELECT

Model	Leg height (mm)	Model	Leg height (mm)
KAT3.5	320~380	KAT9	870~930
KAT4	370~430	KAT9.5	920~980
KAT4.5	420~480	KAT10	970~1,030
KAT5	470~530	KAT10.5	1,020~1,080
KAT5.5	520~580	KAT11	1,070~1,130
KAT6	570~630	KAT11.5	1,120~1,180
KAT6.5	620~680	KAT12	1,170~1,230
KAT7	670~730	KAT12.5	1,220~1,280
KAT7.5	720~780	KAT13	1,270~1,330
KAT8	770~830	KAT13.5	1,320~1,380
KAT8.5	820~880	KAT14	1,370~1,430

■ For a leg height of 500 mm or below, the number of stay will be one.
■ The attachment angle of the legs can be adjusted up to 20° with respect to a horizontal surface.
■ Tell us the presence of the reinforcement pipe.

Model example

KAT - 4 - 300

- KAT: Fixed leg (aluminum)
- 4: Leg height (350 to 450)
- 300: Belt width (mm)
- Adjustment bolt with anchor (optional)

DRAWING

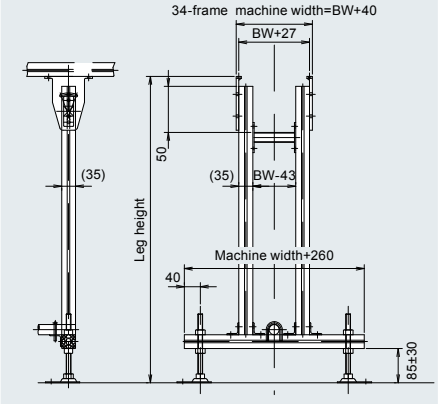

[Stainless steel fixed leg]

Applied to models with a belt width of 200 mm or above.

SELECT

Model	Leg height (mm)	Model	Leg height (mm)
34SUS-CSH4	350~450	34SUS-CSH9.5	900~1,000
34SUS-CSH4.5	400~500	34SUS-CSH10	950~1,050
34SUS-CSH5	450~550	34SUS-CSH10.5	1,000~1,100
34SUS-CSH5.5	500~600	34SUS-CSH11	1,050~1,150
34SUS-CSH6	550~650	34SUS-CSH11.5	1,100~1,200
34SUS-CSH6.5	600~700	34SUS-CSH12	1,150~1,250
34SUS-CSH7	650~750	34SUS-CSH12.5	1,200~1,300
34SUS-CSH7.5	700~800	34SUS-CSH13	1,250~1,350
34SUS-CSH8	750~850	34SUS-CSH13.5	1,300~1,400
34SUS-CSH8.5	800~900	34SUS-CSH14	1,350~1,450
34SUS-CSH9	850~950	34SUS-CSH15	1,450~1,550

■ For a leg height of 500 mm or below, the number of stay will be one.
■ The attachment angle of the legs can be adjusted up to 20° with respect to a horizontal surface.
■ Tell us the presence of the reinforcement pipe.

Model example

34SUS-CSH - 4 - 300

- 34SUS-CSH: Fixed leg (stainless) 34SUS-CSH 34-frame 40SUS-CSH 40-frame
- 4: Leg height (350 to 450)
- 300: Belt width (mm)
- Adjustment bolt with anchor [stainless steel] (optional)

DRAWING

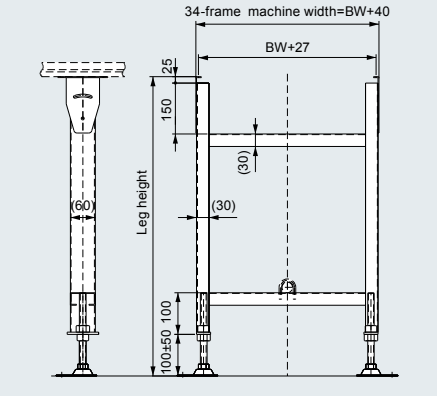

[Upper leg bracket]

For steep slope

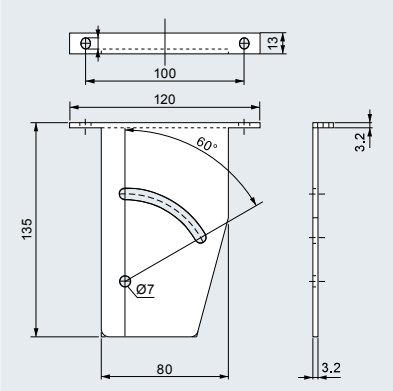

When the attachment angle of the legs is 20° or above with respect to a horizontal surface

For models with cleat (type 34-D2 and type 40-D2)

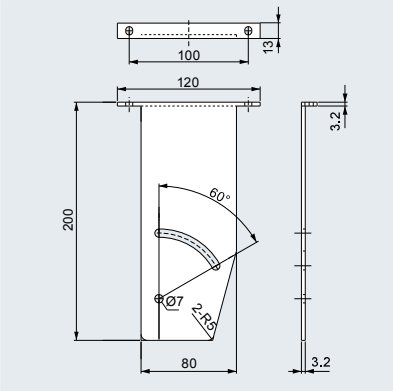

Option 5 Legs [for type 60 frame]

[Steel fixed leg]

Applied to models with a belt width of 200 mm or above.

SELECT

Model	Leg height (mm)	Model	Leg height (mm)
60CSH4	350~450	60CSH9.5	900~1,000
60CSH4.5	400~500	60CSH10	950~1,050
60CSH5	450~550	60CSH10.5	1,000~1,100
60CSH5.5	500~600	60CSH11	1,050~1,150
60CSH6	550~650	60CSH11.5	1,100~1,200
60CSH6.5	600~700	60CSH12	1,150~1,250
60CSH7	650~750	60CSH12.5	1,200~1,300
60CSH7.5	700~800	60CSH13	1,250~1,350
60CSH8	750~850	60CSH13.5	1,300~1,400
60CSH8.5	800~900	60CSH14	1,350~1,450
60CSH9	850~950	60CSH15	1,450~1,550

- For a leg height of 500 mm or below, the number of stay will be one.
- The attachment angle of the legs can be adjusted up to 30° with respect to a horizontal surface.
- Tell us the presence of the reinforcement pipe.

(Standard color: silver)

Model example

60CSH - 8 - 300

Fixed leg (steel) | Leg height (750 to 850) | Belt width (mm) | Adjustment bolt with anchor (optional)

DRAWING

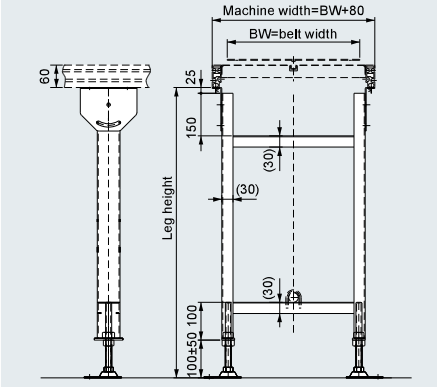

[Aluminum fixed leg]

Applied to models with a belt width of 200 mm or above.

SELECT

Model	Leg height (mm)	Model	Leg height (mm)
CAH4	350~450	CAH9.5	900~1,000
CAH4.5	400~500	CAH10	950~1,050
CAH5	450~550	CAH10.5	1,000~1,100
CAH5.5	500~600	CAH11	1,050~1,150
CAH6	550~650	CAH11.5	1,100~1,200
CAH6.5	600~700	CAH12	1,150~1,250
CAH7	650~750	CAH12.5	1,200~1,300
CAH7.5	700~800	CAH13	1,250~1,350
CAH8	750~850	CAH13.5	1,300~1,400
CAH8.5	800~900	CAH14	1,350~1,450
CAH9	850~950	CAH15	1,450~1,550

- For a leg height of 500 mm or below, the number of stay will be one.
- The attachment angle of the legs can be adjusted up to 30° with respect to a horizontal surface.
- Tell us the presence of the reinforcement pipe.

Model example

CAH - 6 - 400

Fixed leg (aluminum) | Leg height (550 to 650) | Belt width (mm) | Adjustment bolt with anchor (optional)

DRAWING

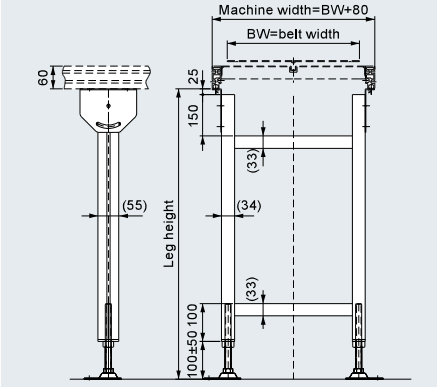

[Stainless steel fixed leg]

Applied to models with a belt width of 200 mm or above.

SELECT

Model	Leg height (mm)	Model	Leg height (mm)
60SUS-CSH4	350~450	60SUS-CSH9.5	900~1,000
60SUS-CSH4.5	400~500	60SUS-CSH10	950~1,050
60SUS-CSH5	450~550	60SUS-CSH10.5	1,000~1,100
60SUS-CSH5.5	500~600	60SUS-CSH11	1,050~1,150
60SUS-CSH6	550~650	60SUS-CSH11.5	1,100~1,200
60SUS-CSH6.5	600~700	60SUS-CSH12	1,150~1,250
60SUS-CSH7	650~750	60SUS-CSH12.5	1,200~1,300
60SUS-CSH7.5	700~800	60SUS-CSH13	1,250~1,350
60SUS-CSH8	750~850	60SUS-CSH13.5	1,300~1,400
60SUS-CSH8.5	800~900	60SUS-CSH14	1,350~1,450
60SUS-CSH9	850~950	60SUS-CSH15	1,450~1,550

- For a leg height of 500 mm or below, the number of stay will be one.
- The attachment angle of the legs can be adjusted up to 30° with respect to a horizontal surface.
- Tell us the presence of the reinforcement pipe.

Model example

60SUS-CSH - 7 - 300

Fixed leg (stainless) | Leg height (650 to 750) | Belt width (mm) | Adjustment bolt with anchor (optional)

DRAWING

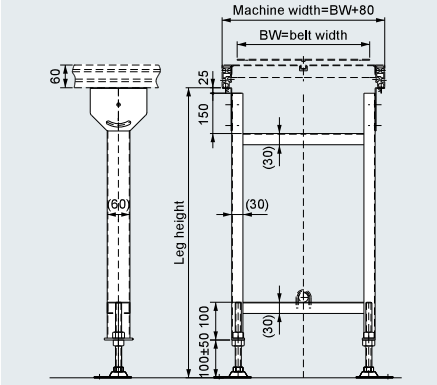

Option 6 Legs [for type 90 frame]

[Steel fixed leg]

Applied to models with a belt width of 200 mm or above.

SELECT

Model	Leg height (mm)	Model	Leg height (mm)
JSH4	350~450	JSH9.5	900~1,000
JSH4.5	400~500	JSH10	950~1,050
JSH5	450~550	JSH10.5	1,000~1,100
JSH5.5	500~600	JSH11	1,050~1,150
JSH6	550~650	JSH11.5	1,100~1,200
JSH6.5	600~700	JSH12	1,150~1,250
JSH7	650~750	JSH12.5	1,200~1,300
JSH7.5	700~800	JSH13	1,250~1,350
JSH8	750~850	JSH13.5	1,300~1,400
JSH8.5	800~900	JSH14	1,350~1,450
JSH9	850~950	JSH15	1,450~1,550

- For a leg height of 500 mm or below, the number of stay will be one.
- The attachment angle of the legs can be adjusted up to 30° with respect to a horizontal surface.
- Tell us the presence of the reinforcement pipe.

(Standard color: silver)

Model example

JSH - 5 - 500

Fixed leg (steel) | Leg height | Belt width (mm) | Adjustment bolt with anchor (optional)

DRAWING

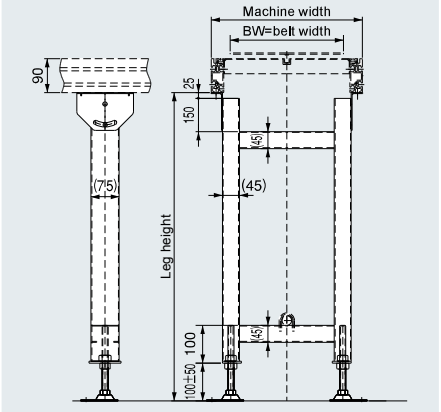

[Aluminum fixed leg]

Applied to models with a belt width of 200 mm or above.

SELECT

Model	Leg height (mm)	Model	Leg height (mm)
JAH4	350~450	JAH9.5	900~1,000
JAH4.5	400~500	JAH10	950~1,050
JAH5	450~550	JAH10.5	1,000~1,100
JAH5.5	500~600	JAH11	1,050~1,150
JAH6	550~650	JAH11.5	1,100~1,200
JAH6.5	600~700	JAH12	1,150~1,250
JAH7	650~750	JAH12.5	1,200~1,300
JAH7.5	700~800	JAH13	1,250~1,350
JAH8	750~850	JAH13.5	1,300~1,400
JAH8.5	800~900	JAH14	1,350~1,450
JAH9	850~950	JAH15	1,450~1,550

- For a leg height of 500 mm or below, the number of stay will be one.
- The attachment angle of the legs can be adjusted up to 30° with respect to a horizontal surface.
- Tell us the presence of the reinforcement pipe.

Model example

JAH - 6 - 600

Fixed leg (aluminum) | Leg height | Belt width (mm) | Adjustment bolt with anchor (optional)

DRAWING

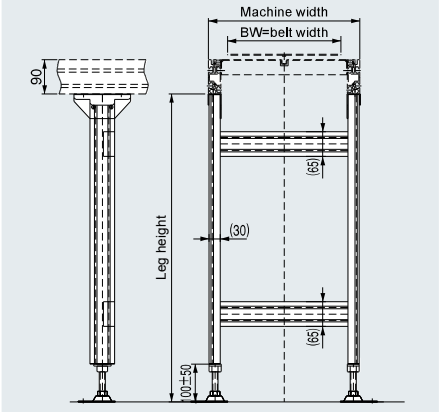

[Stainless steel fixed leg]

Applied to models with a belt width of 200 mm or above.

SELECT

Model	Leg height (mm)	Model	Leg height (mm)
SUS-JSH4	350~450	SUS-JSH9.5	900~1,000
SUS-JSH4.5	400~500	SUS-JSH10	950~1,050
SUS-JSH5	450~550	SUS-JSH10.5	1,000~1,100
SUS-JSH5.5	500~600	SUS-JSH11	1,050~1,150
SUS-JSH6	550~650	SUS-JSH11.5	1,100~1,200
SUS-JSH6.5	600~700	SUS-JSH12	1,150~1,250
SUS-JSH7	650~750	SUS-JSH12.5	1,200~1,300
SUS-JSH7.5	700~800	SUS-JSH13	1,250~1,350
SUS-JSH8	750~850	SUS-JSH13.5	1,300~1,400
SUS-JSH8.5	800~900	SUS-JSH14	1,350~1,450
SUS-JSH9	850~950	SUS-JSH15	1,450~1,550

- For a leg height of 500 mm or below, the number of stay will be one.
- The attachment angle of the legs can be adjusted up to 30° with respect to a horizontal surface.
- Tell us the presence of the reinforcement pipe.

Model example

SUS-JSH - 7 - 400

Fixed leg (stainless) | Leg height | Belt width (mm) | Adjustment bolt with anchor (optional)

DRAWING

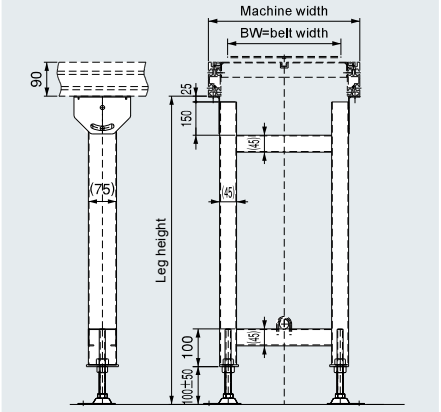

Option 7 Legs [for types 34, 40, and 60, ModeL34-frame]

[High legs for high machine height]
(1,501 to 2,500 H, steel)

(Standard color: silver)

SELECT

Model	Leg height (mm)
HSH15.5	1,500~1,600
HSH16	1,550~1,650
HSH17	1,650~1,750
HSH18	1,750~1,850
HSH19	1,850~1,950
HSH20	1,950~2,050
HSH21	2,050~2,150
HSH22	2,150~2,250
HSH23	2,250~2,350
HSH24	2,350~2,450
HSH24.5	2,400~2,500

Model example

HSH - 18 - 500 - A

- HSH: Fixed leg (steel)
- 18: Leg height (1,701 to 1,800)
- 500: Belt width (mm)
- A: Hakama

DRAWING

●For 200 to 400 BW ●For 500 to 600 BW

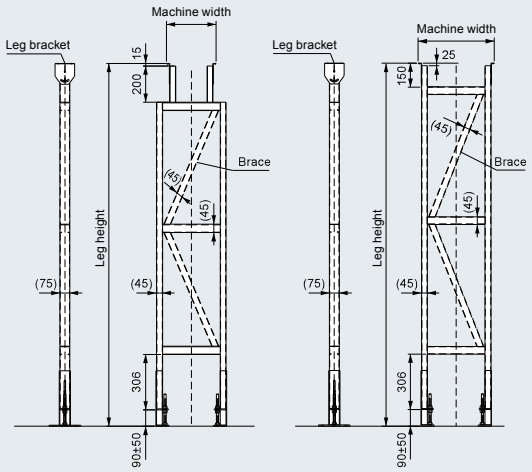

*A brace comes with the leg for a height of 2,001 mm or above.

[Number of legs by machine length]

Standard leg (KSK) / Auxiliary leg (KSI)

Machine length (m)	1.0~2.4	2.5~3.0	3.1~4.0	4.1~5.4	5.5~8.0	(8.1~9.0)	(9.1~12.0)
Standard leg	1	2	2	2	3	3	4
Auxiliary leg	1	1	1	2	2	3	3

Fixed leg

Machine length (m)	1.0~2.4	2.5~3.0	3.1~4.0	4.1~5.4	5.5~8.0	(8.1~9.0)	(9.1~12.0)
Fixed leg	2	3	3	4	5	6	7

[Adjustment bolt]

DRAWING

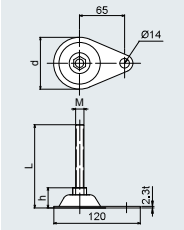

SELECT

Adjustment bolt with anchor plate (Unit: mm)

M	h	d	L
M12	25	75	175
M16	27	75	207

Option 8 Guide

A guide can also be selected depending on the carried items, conveyance, and conditions.

How to select a model

3G — T — L

3G: Guide for 34-frame	T: Steel	L: Fixed type
6G: Guide for 60-frame	A: Aluminum	O: Pipe, round bar type
9G: Guide for 90-frame	J: Resin	F: Flat type
	S: Stainless steel	S: Skirt type

Guide for 34-frame

3G-TL model
(Steel)
/fixed type

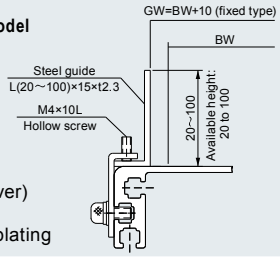

Type A
Painting (silver)
Type B
Unichrome plating

3G-AL model
(Aluminum)
/fixed type

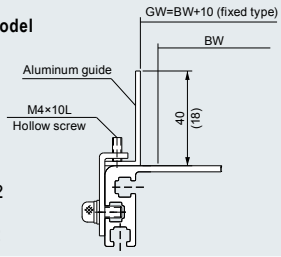

Type A
L40×15× t 2
Type B
L18×15× t 2

3G-SL model
(Stainless steel)
/fixed type

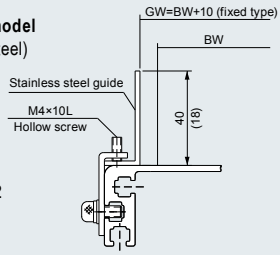

Type A
L40×15× t 2
Type B
L18×15× t 2

3G-SO-1 model
(Stainless steel)
/width adjustment type

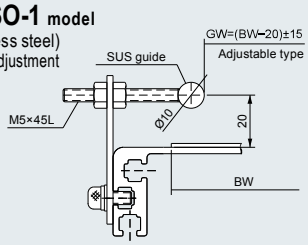

3G-SO-2 model
(Stainless steel)
/height and width adjustment type

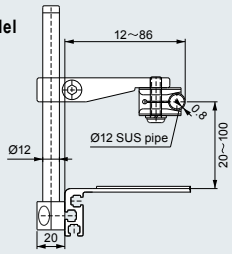

3G-SO-3 model
(Stainless steel)
/fixed type

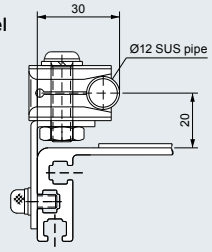

3G-SF model
(Stainless steel)
/width adjustment type

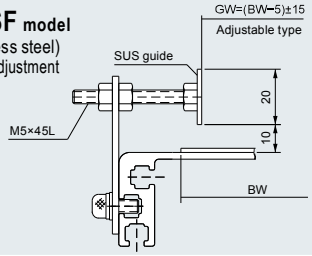

3G-JO-1 model
(Resin type)
/width adjustment type

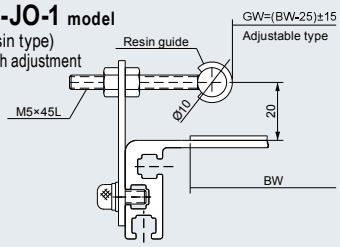

3G-AF model
(Aluminum)
/height and width adjustment type

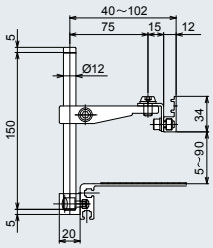

3G-AF-1 model
(Aluminum)
/height and width adjustment type

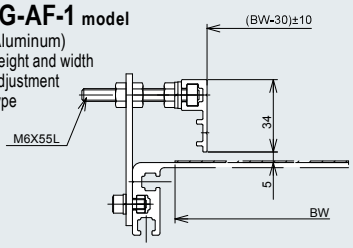

3G-JF-1 model
(Resin type)
/width adjustment type

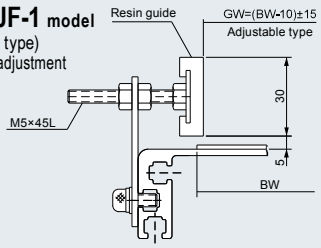

3G-JU model
(Guide with resin skirt)
/fixed type

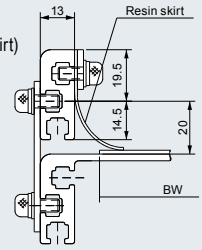

Guide for 40-frame

4G-AF-1 model

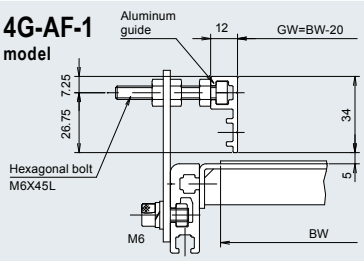

4G-AF-2 model

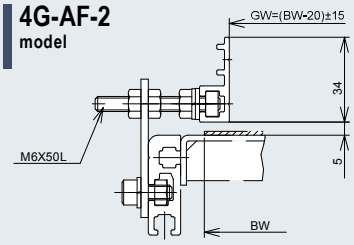

4G-JU model

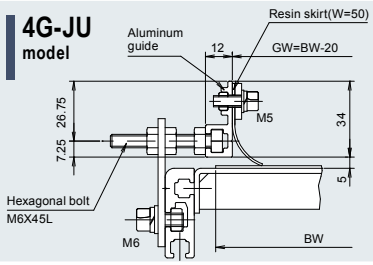

Option 9 Guide

A guide can also be selected depending on the carried items, conveyance, and conditions.

6G-TL model
(Steel)
/fixed type

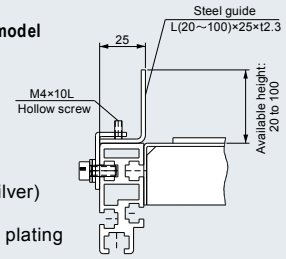

Type A
Painting (silver)
Type B
Unichrome plating

Guide for 60-frame

6G-AL model
(Aluminum)
/fixed type

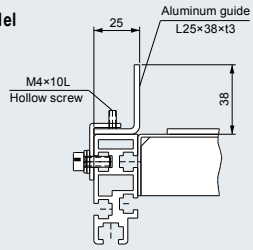

6G-SL model
(Stainless steel)
/fixed type

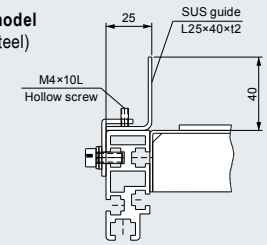

6G-SO-1 model
(Stainless steel)
/width adjustment type

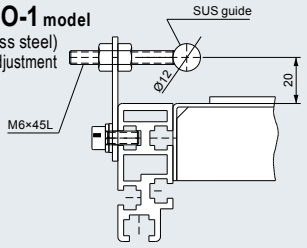

6G-SO-2 model
(Stainless steel)
/height and width adjustment type

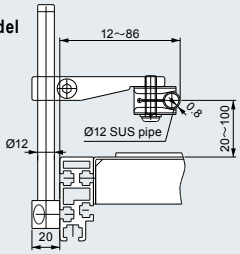

6G-SO-3 model
(Stainless steel)
/height and width adjustment type

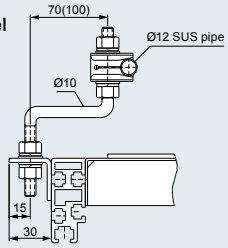

6G-SF model
(Stainless steel)
/width adjustment type

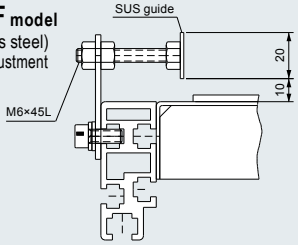

6G-JO-1 model
(Resin type)
/width adjustment type

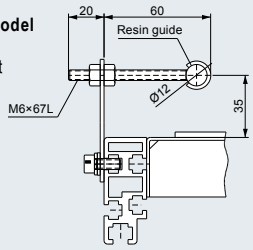

6G-AF model
(Aluminum)
/height and width adjustment type

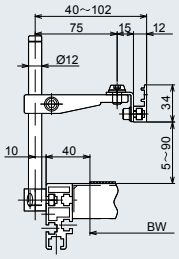

6G-AF-1 model
(Aluminum)
/height and width adjustment type

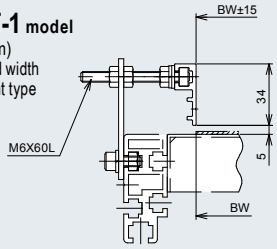

6G-JF-1 model
(Resin type)
/width adjustment type

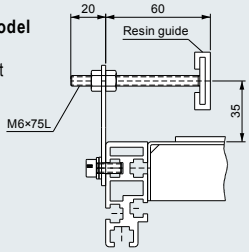

6G-JU model
(Guide with resin skirt)
/height adjustment type

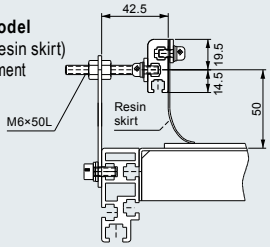

6G-SO model
(Ø25 pipe)
/height and width adjustment type

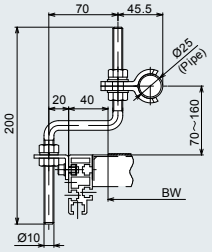

Guide for 90-frame

9G-TL-1 model
(Steel)
/fixed type

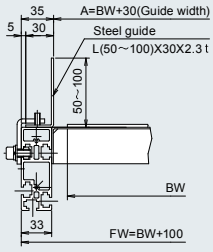

Type A
Painting (silver)
Type B
Unichrome plating

9G-TL-2 model
(Steel)
/fixed type

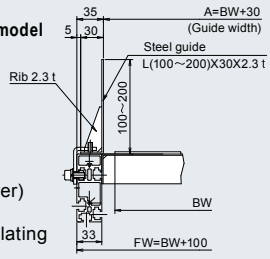

Type A
Painting (silver)
Type B
Unichrome plating

9G-SL model
(Stainless steel)
/fixed type

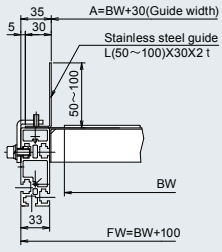

9G-JF-1 model
(Resin)
/fixed type

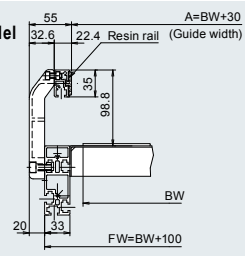

9G-JF-2 model
(Resin type)
/width adjustment type

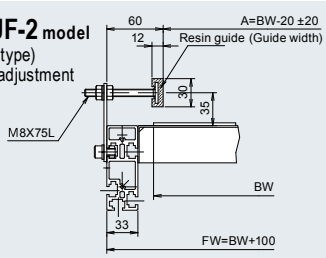

9G-SO model
(Ø25 pipe)
/height and width adjustment type

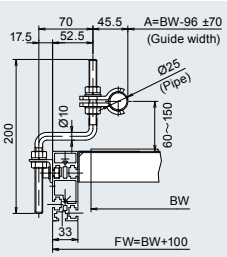

Option 10 Optional parts

Side belt type guide conveyor [side guide scraper belt conveyor M II] (for food industry)

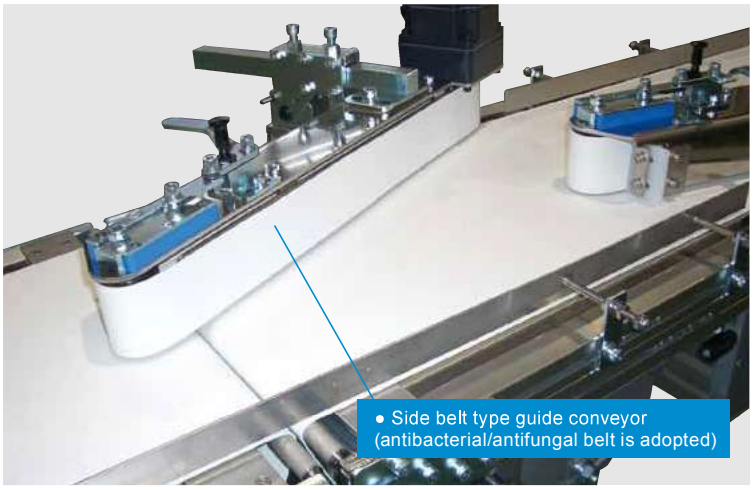

[Applications]

- Aligns works in other rows into one row by speeding up the belt.
- Utilized as a branching device.
- Utilized as a perpendicular direction changing machine.
- Able to pass works by the flip-up function.
- Equipped with belt loosening device.

[Flip-up mechanism]

For multi-row conveyance, the flip-up mechanism can be used to effectively utilize the conveyor belt. The side belt can also be attached and detached easily.

■ Specifications

(Unit: mm)

Compatible models	Type60、Type90 / AR60
Machine length	500mm～700mm
Belt width	50 mm (antibacterial/antifungal belt)
Speed	50 m/min at max. (speed change)

Usage example 1

Aligns works in multiple rows into one row with the side belt type guides and by speeding up the belt conveyor.

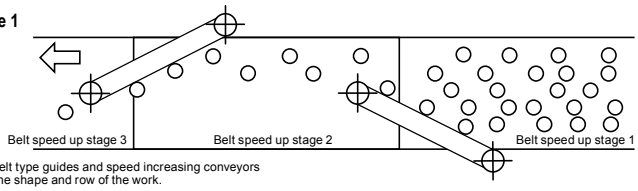

*The number of side belt type guides and speed increasing conveyors differs depending on the shape and row of the work.

Usage example 2

Utilized as a branching device.
The side belt type guides are used to sort one row into two rows.

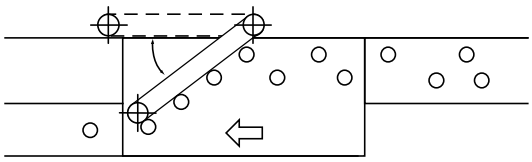

Usage example 3

Utilized as a perpendicular direction changing machine.
•The side belt type guide is used to change the direction by 90° in a small space.

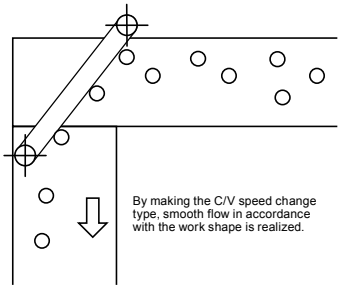

[Drawing]

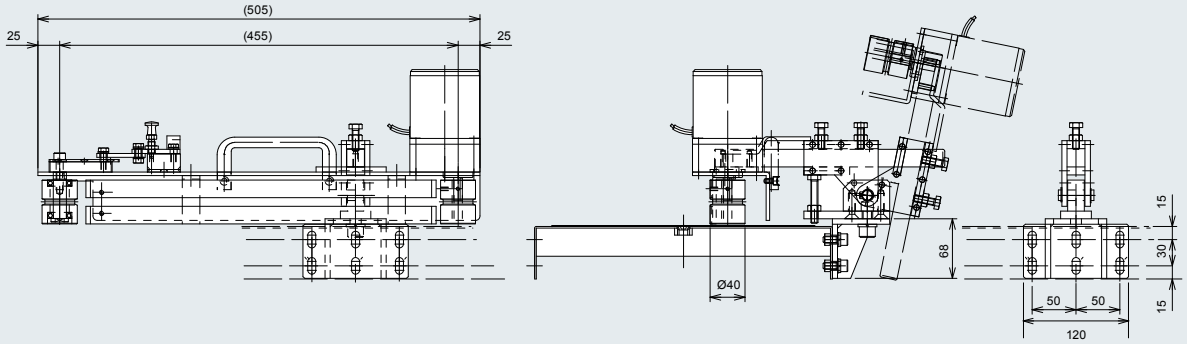

Option 10 Optional parts

Detachable scraper (for food industry)

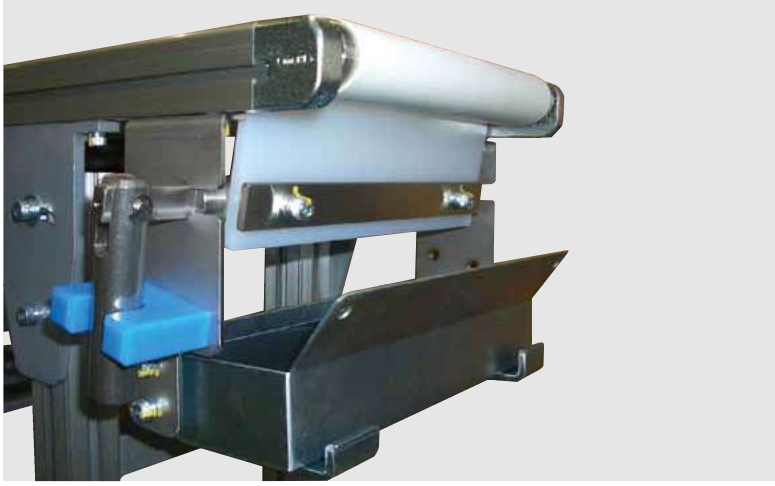

*The above picture shows a detachable scraper attached to a type 34 model.

[Applications]

The scraper is used to remove dirt that adhered on the belt surface.
The edge plate can be removed to wash away any dirt on it with water.
The dirt removed by the edge plate goes into a dirt receiving container, and the floor does not get dirty.

■ Specifications

Compatible models	ModeL34, types 34, 60, 90, and AR (materials and structure may differ partly)
Belt width	100 W to 600 W (700 W to 1,000 W are substandard)

- The edge plate (resin) attachment part uses SUS.
- Parts of the dirt receiving container is made of an SS material and plated.

[Drawing]

Detachable scraper

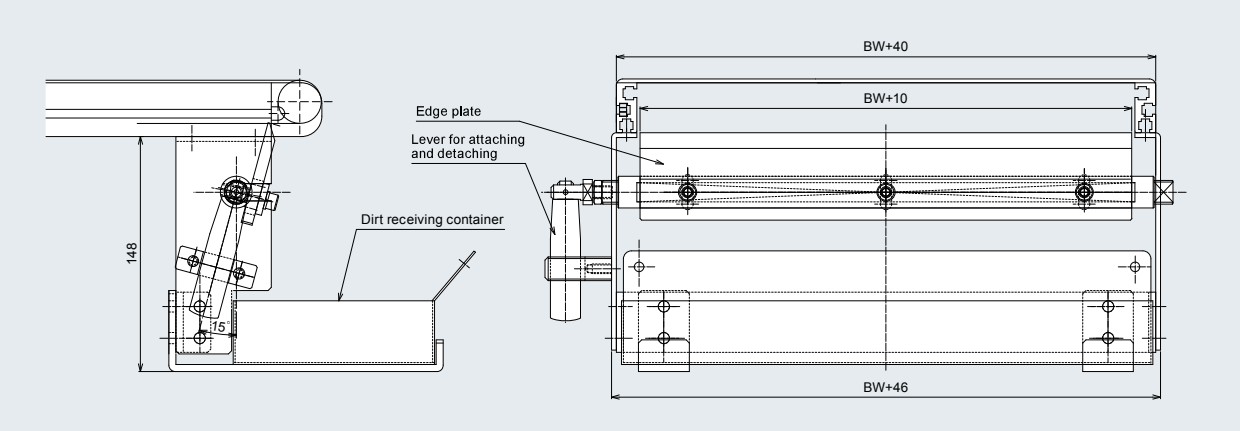

34-scraper

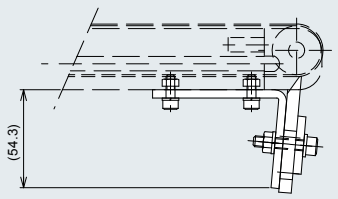

60-scraper

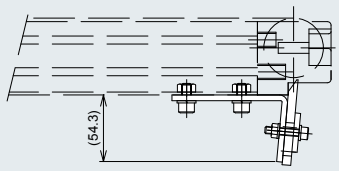

Detachable scraper

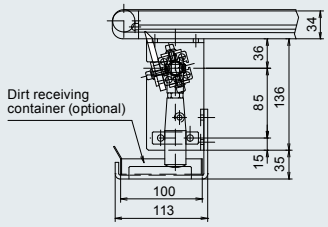

*The attachment part is made of an SS material and plated.

Scrapers are optional parts for removing dirt on the belt. A brush type can also be made.

Option 10 Optional parts

34-frame hopper

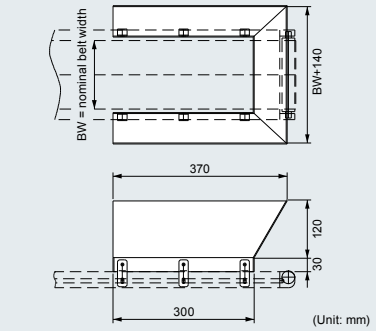

34-frame chute

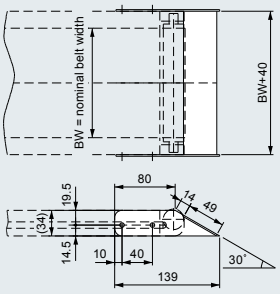

34-frame connecting fitting

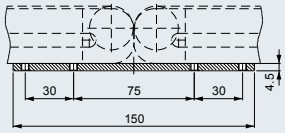

60-frame connecting fitting

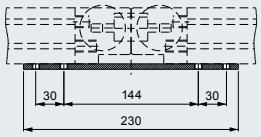

60-frame hopper

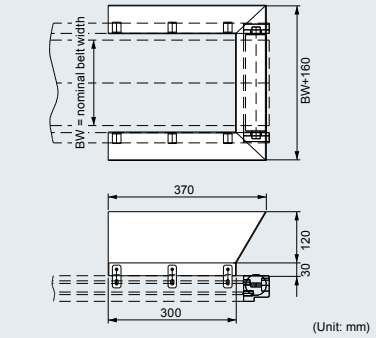

60-frame chute

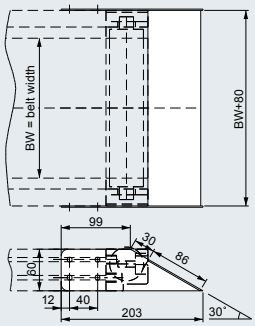

Tool-less guide

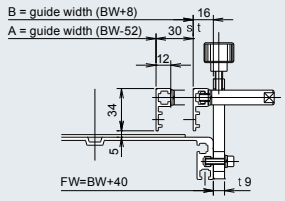

Hopper

Optional part effective for carrying bulk solids.

Tip chute

Optional part for smoothly transferring carried items.

Connecting fitting (fixed type)

Fitting for fixing conveyors.

34-transfer plate

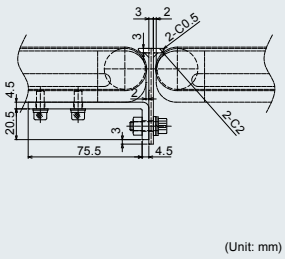

34-transfer roller

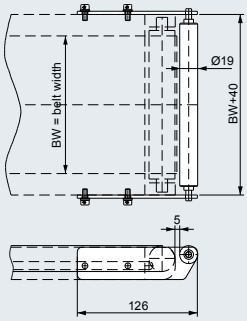

34-stopper (SS material)

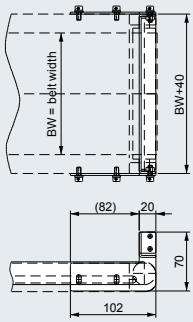

34-turn roller

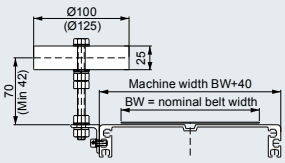

60-transfer plate

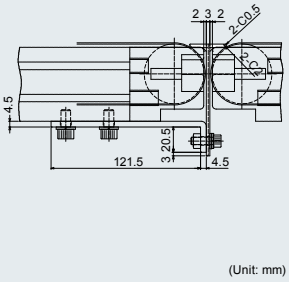

60-transfer roller

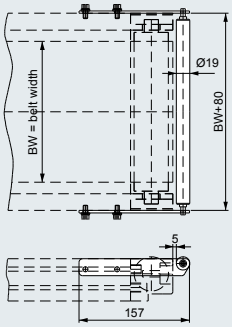

60-stopper (SS material)

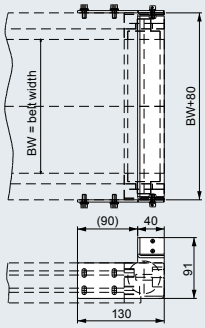

60-turn roller

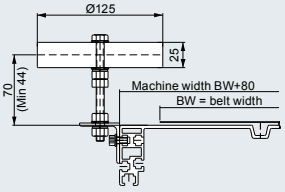

Transfer plate

Optional part for smoothly transferring carried items from a conveyor to a conveyor.
The plate is made of stainless steel.

Transfer roller

Optional part for smoothly transferring carried items from a conveyor to a conveyor.
The roller is made of stainless steel.

Stopper

Optional part for stopping carried items.
Use a slip belt when using a stopper.

Turn roller

Optional part for smoothly making carried items to merge or change direction.